Compass

B. Wojtsekhowski, JLab

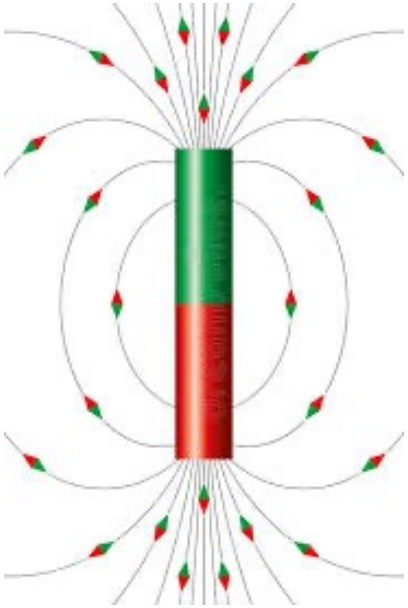

Traditional compass was originated
in China around the 4th century BC

In this magnetic compass the torque (T= M x B)
is used to orient the magnetic arrow.
Achievable accuracy is about 0.5 degree

1. Where in JLab do we need a high precision compass?

2. Vector property of the magnetic field

3. Concept of the Spinning Hall Probe based on
   an oscillating signal. Sensitivity of the Hall probe.

4. Operational prototype performance

A polarized e$^-$ beam on a polarized target => A => GEn/GMn

$$A_{\text{phys}} = -\frac{2\sqrt{\tau(\tau+1)}\tan(\frac{\theta}{2})G_E^n G_M^n \sin\theta^* \cos\phi^*}{(G_E^n)^2 + (G_M^n)^2(\tau + 2\tau(1+\tau)\tan^2(\frac{\theta}{2}))}$$

$$- \frac{2\tau\sqrt{1+\tau+(1+\tau)^2\tan^2(\frac{\theta}{2})}\tan(\frac{\theta}{2})(G_M^n)^2 \cos\theta^*}{(G_E^n)^2 + (G_M^n)^2(\tau + 2\tau(1+\tau)\tan^2(\frac{\theta}{2}))}$$

~ 90 deg.

For 11 GeV beam, $Q^2 = 10$ GeV^2
the relative uncertainty (for Galster's GEn)
$\delta A/A \sim 0.01$ for $\delta\theta^* = 1$ mrad

A He-3 polarized target

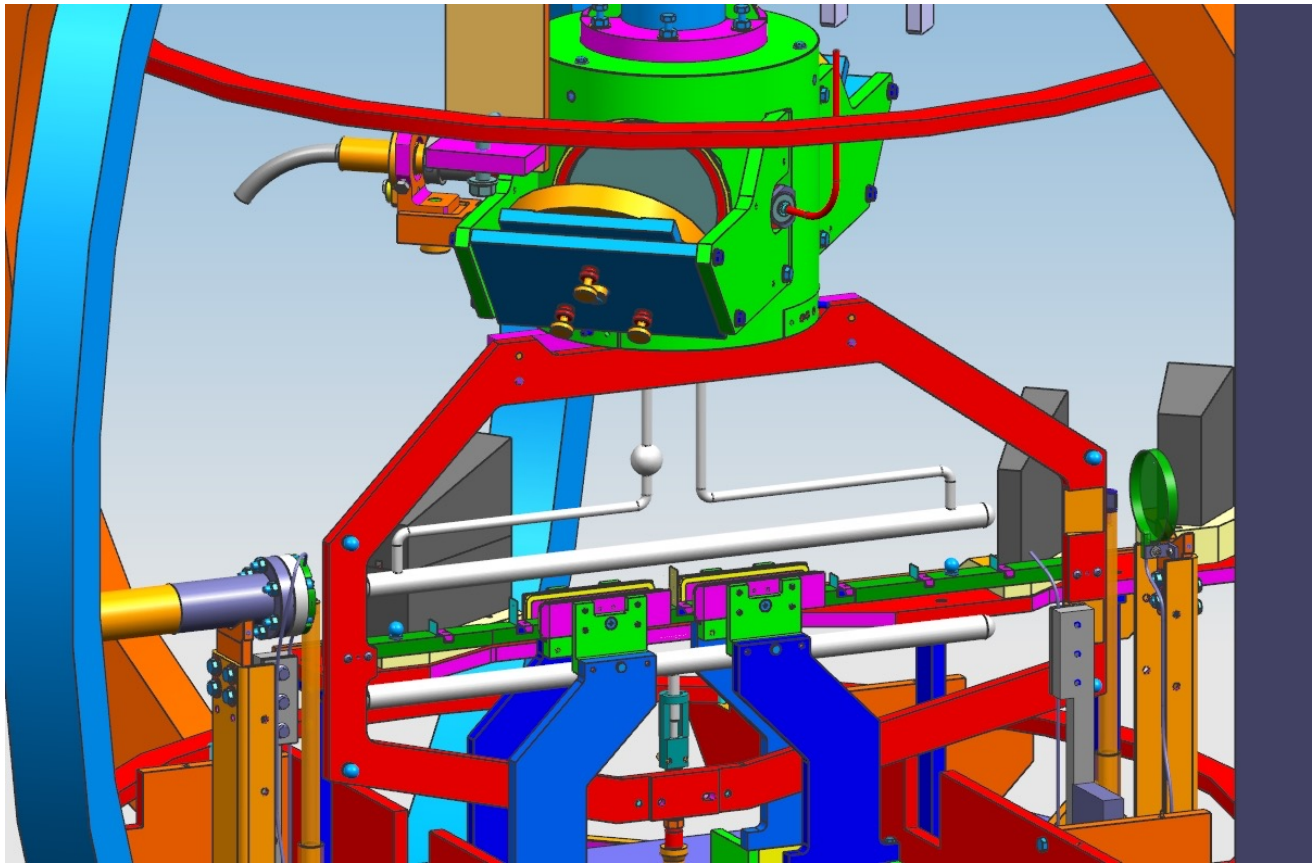

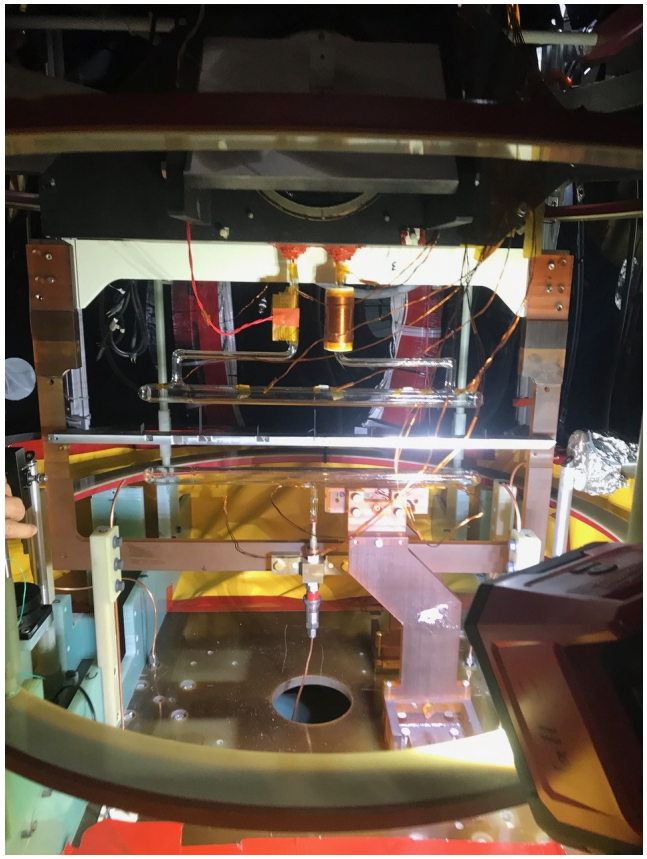

Concept of a new compass

Separate functions: detection of misalignment and correction of the spin direction

a) Detection of the field vector and the compass axis misalignment by using
the transverse component of the magnetic field –> oscillating signal from a Hall probe.
No problem with calibration, sensitivity drift, alignment of the probe's plane.

b) Correction of the compass axis direction by means of e.g. a set of fine screws

Spinning Hall Probe Compass

TEXAS INSTRUMENTS

DRV5053 Analog-

1 Features

- Linear Output Hall Sensor
- Superior Temperature Stability
  - Sensitivity ±10% Over Temperature
- High Sensitivity Options:
  - –11 mV/mT (OA, See Figure 17)
  - –23 mV/mT (PA)
  - –45 mV/mT (RA)
  - –90 mV/mT (VA)
  - +23 mV/mT (CA)
  - +45 mV/mT (EA)

9 mV/Gauss

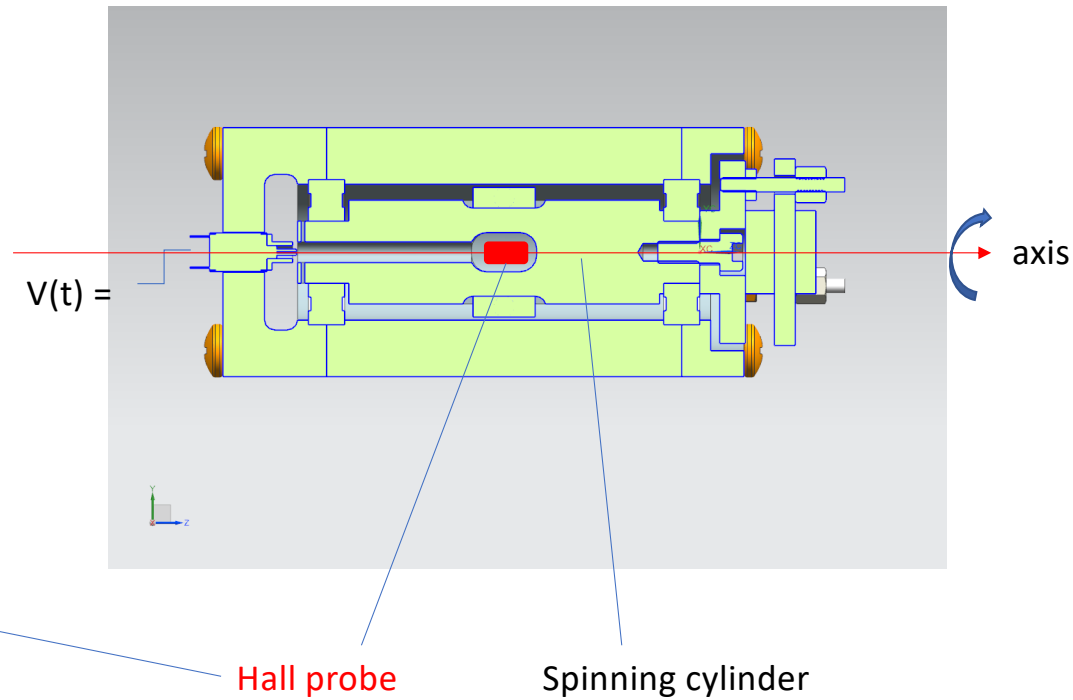

The B vector has no transverse components relative to itself!

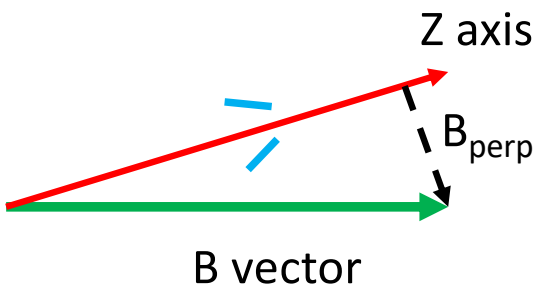

when $B_{perp} = 0$, the compass is aligned!

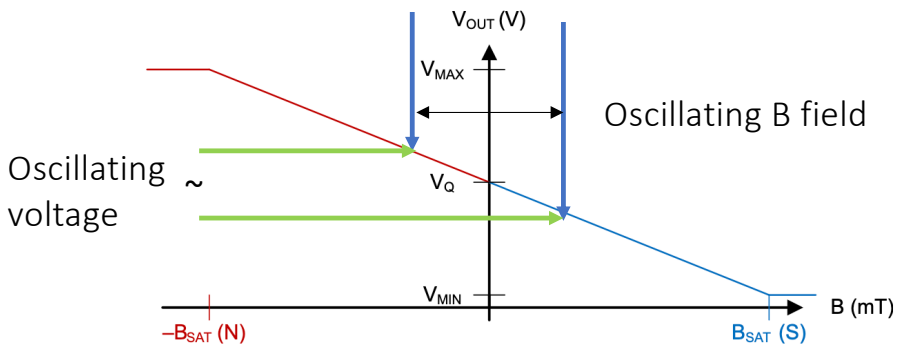

Figure 8. DRV5053 – Negative Sensitivity

Electronic noise is below 0.5 mV at 10 Hz

In this compass the Hall effect is used for detection of the transverse field. Additional mechanism will be used to align the axis to the field direction.

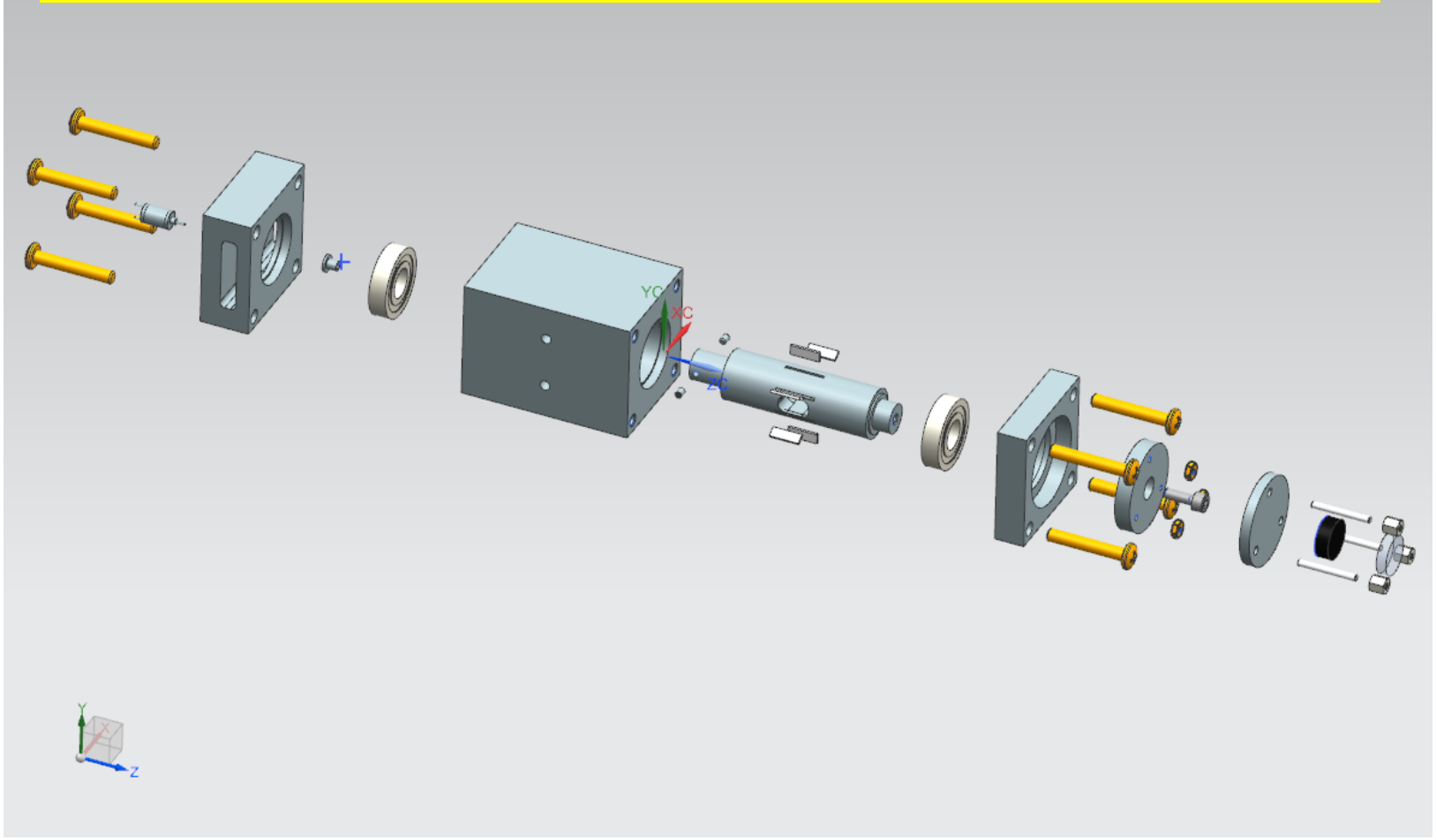

Unexpensive Hall probe

Product Folder | Order Now | Technical Documents | Tools & Software | Support & Community

TEXAS INSTRUMENTS

DRV5053

SLIS153C – MAY 2014 – REVISED DECEMBER 2015

DRV5053 Analog-Bipolar Hall Effect Sensor

1 Features

- Linear Output Hall Sensor
- Superior Temperature Stability
  - Sensitivity ±10% Over Temperature
- High Sensitivity Options:
  - –11 mV/mT (OA, See Figure 17)
  - –23 mV/mT (PA)
  - –45 mV/mT (RA)
  - –90 mV/mT (VA)
  - +23 mV/mT (CA)
  - +45 mV/mT (EA)
- Supports a Wide Voltage Range
  - 2.5 to 38 V
  - No External Regulator Required
- Wide Operating Temperature Range
  - T_A = –40 to 125°C (Q, see Figure 17)
- Amplified Output Stage
  - 2.3-mA Sink, 300 µA Source
- Output Voltage: 0.2 ~ 1.8 V
  - B = 0 mT, OUT = 1 V
- Fast Power-On: 35 µs
- Small Package and Footprint
  - Surface Mount 3-Pin SOT-23 (DBZ)
    - 2.92 mm × 2.37 mm
  - Through-Hole 3-Pin TO-92 (LPG)

2 Applications

- Flow Meters
- Docking Adjustment
- Vibration Correction
- Damper Controls

3 Description

The DRV5053 device is a chopper-stabilized Hall IC that offers a magnetic sensing solution with superior sensitivity stability over temperature and integrated protection features.

The 0- to 2-V analog output responds linearly to the applied magnetic flux density, and distinguishes the polarity of magnetic field direction. A wide operating voltage range from 2.5 to 38 V with reverse polarity protection up to –22 V makes the device suitable for a wide range of industrial and consumer applications.

Internal protection functions are provided for reverse supply conditions, load dump, and output short circuit or overcurrent.

Device Information(1)

PART NUMBER	PACKAGE	BODY SIZE (NOM)
DRV5053	SOT-23 (3)	2.92 mm × 1.30 mm
	TO-92 (3)	4.00 mm × 3.15 mm

(1) For all available packages, see the orderable addendum at the end of the data sheet.

- **Protection Features**
  - Reverse Supply Protection (up to –22 V)
  - Supports up to 40-V Load Dump
  - Output Short-Circuit Protection
  - Output Current Limitation

Output State

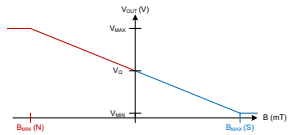

Device Packages

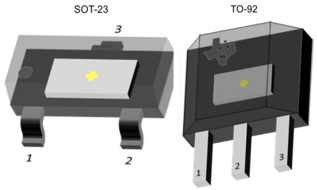

Sensor with the front-end

Hall probe

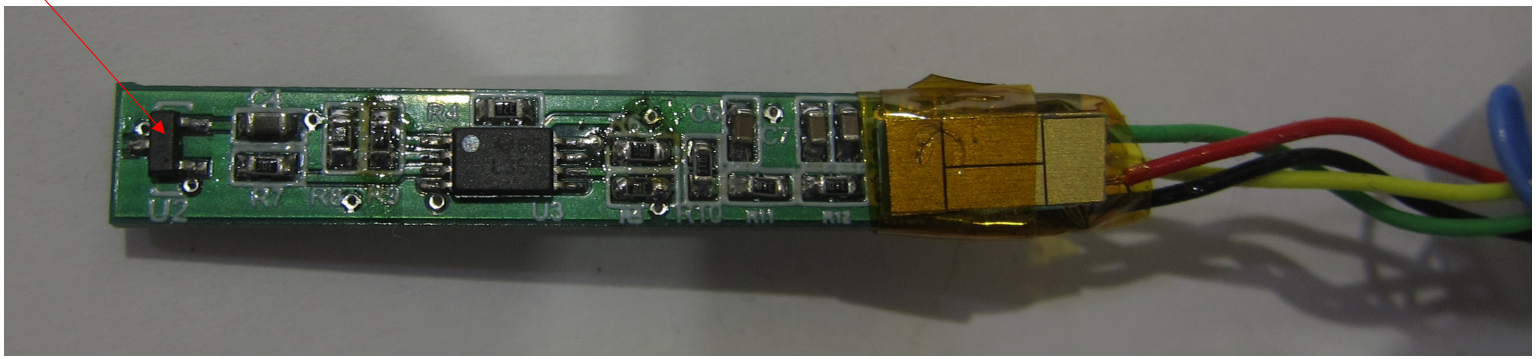

Front-end provides an additional signal gain by a factor of 10

Spinning HP Prototype

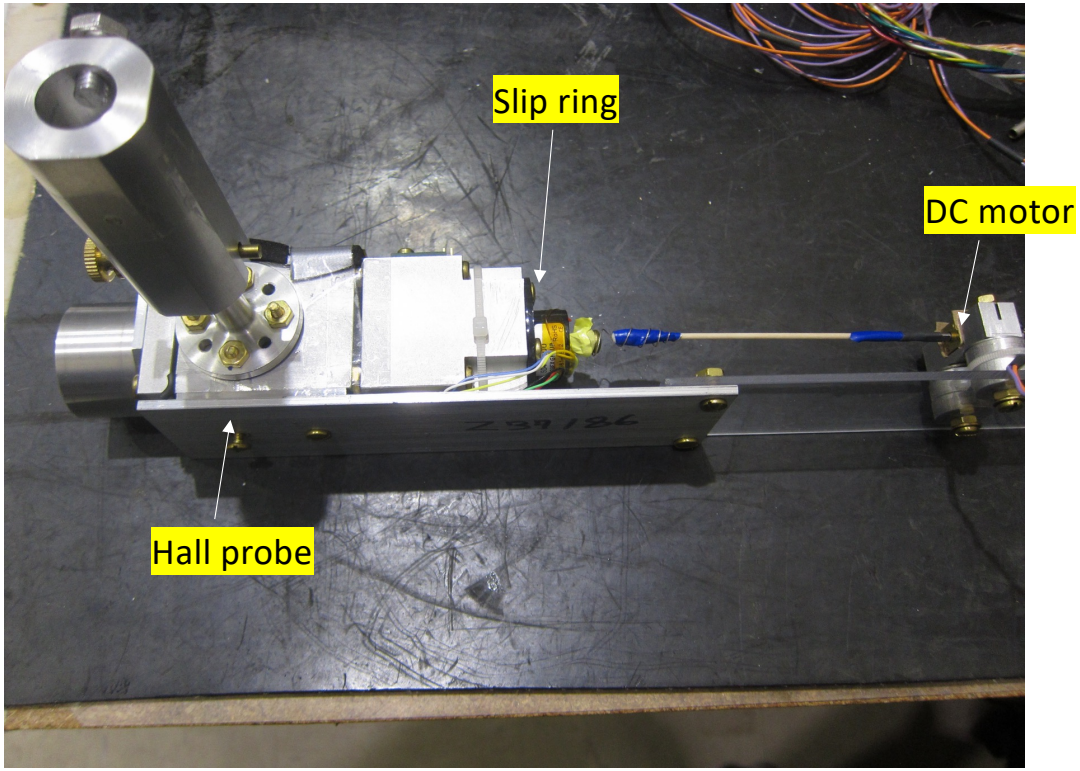

Test in Earth field

Inside magnetic shield ~ 0.5 mV
noise level of 0.1 mV

In ~ 0.50 Gauss => 17 mV

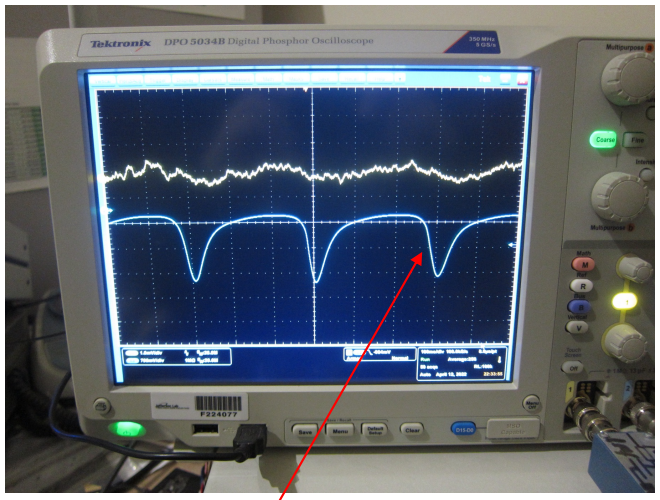

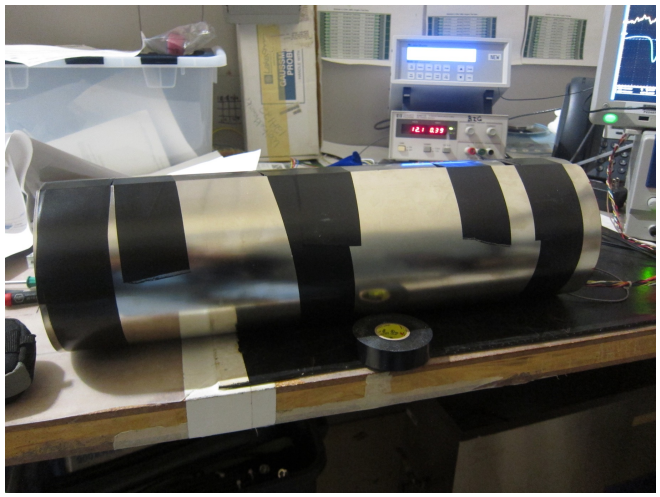

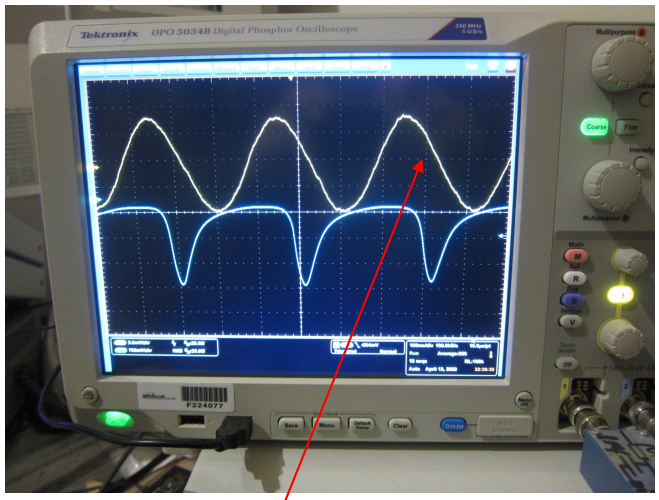

reference signal from spinning LED

Hall probe signal

Determination of the direction of the axis of rotation

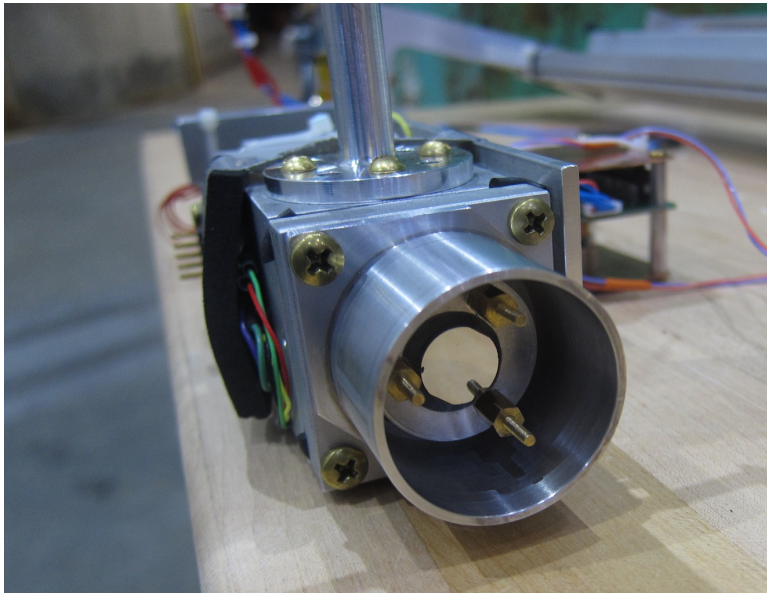

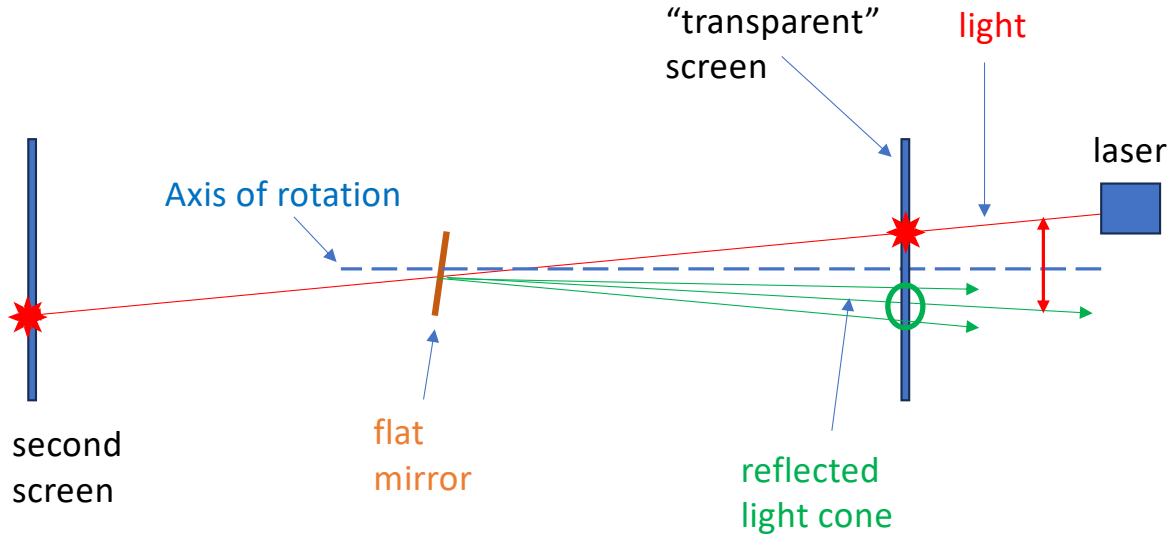

Spinning HP prototype

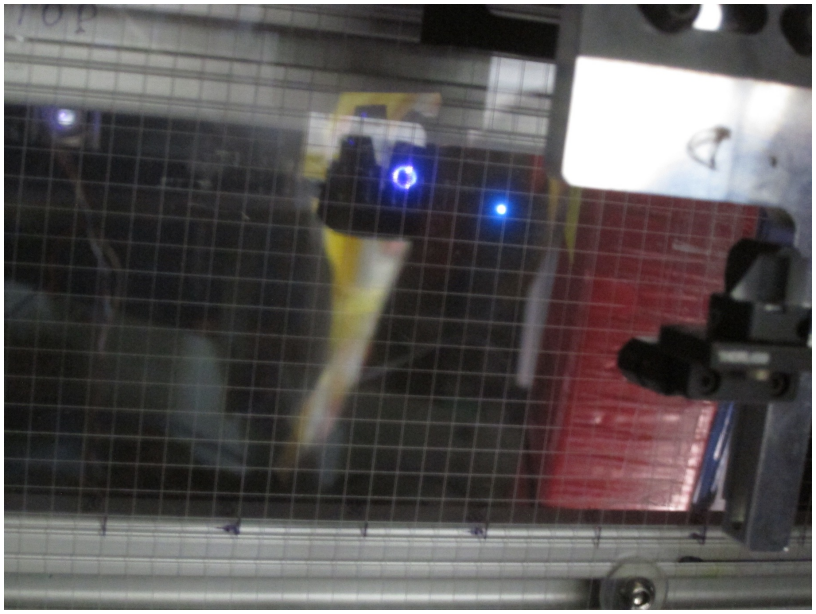

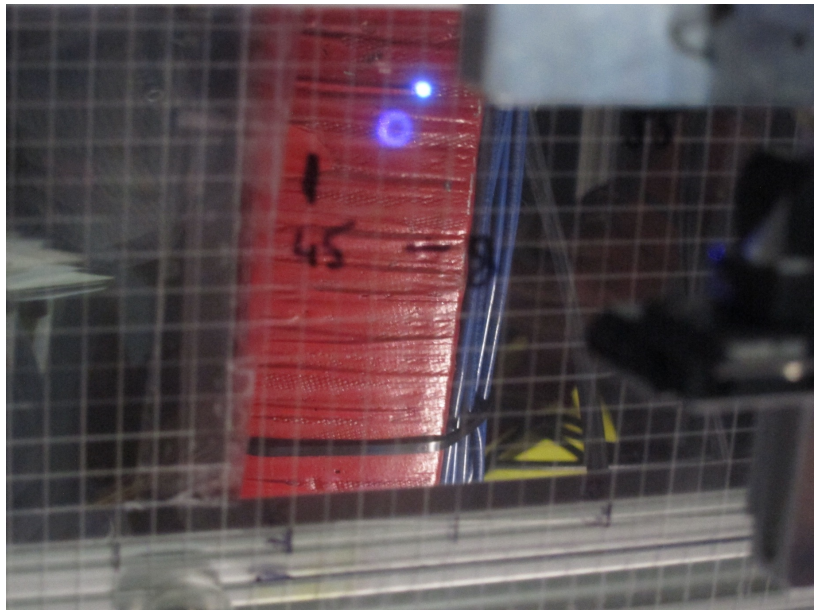

Thank you

Spinning HP Patent application

(12) INTERNATIONAL APPLICATION PUBLISHED UNDER THE PATENT COOPERATION TREATY (PCT)

(19) World Intellectual Property Organization
International Bureau

(43) International Publication Date
15 September 2022 (15.09.2022)

WIPO | PCT

(10) International Publication Number
WO 2022/191995 A1

(51) International Patent Classification:
G01R 33/07 (2006.01)

(21) International Application Number:
PCT/US2022/017497

(22) International Filing Date:
23 February 2022 (23.02.2022)

(25) Filing Language: English

(26) Publication Language: English

(30) Priority Data:

63/158,172	08 March 2021 (08.03.2021)	US
17/671,112	14 February 2022 (14.02.2022)	US

(71) Applicant: JEFFERSON SCIENCE ASSOCIATES, LLC [US/US]; 12000 Jefferson Avenue, Newport News, VA 23606 (US).

DZ, EC, EE, EG, ES, FI, GB, GD, GE, GH, GM, GT, HN, HR, HU, ID, IL, IN, IR, IS, IT, JM, JO, JP, KE, KG, KH, KN, KP, KR, KW, KZ, LA, LC, LK, LR, LS, LU, LY, MA, MD, ME, MG, MK, MN, MW, MX, MY, MZ, NA, NG, NI, NO, NZ, OM, PA, PE, PG, PH, PL, PT, QA, RO, RS, RU, RW, SA, SC, SD, SE, SG, SK, SL, ST, SV, SY, TH, TJ, TM, TN, TR, TT, TZ, UA, UG, US, UZ, VC, VN, WS, ZA, ZM, ZW.

(84) Designated States *(unless otherwise indicated, for every kind of regional protection available)*: ARIPO (BW, GH, GM, KE, LR, LS, MW, MZ, NA, RW, SD, SL, ST, SZ, TZ, UG, ZM, ZW), Eurasian (AM, AZ, BY, KG, KZ, RU, TJ, TM), European (AL, AT, BE, BG, CH, CY, CZ, DE, DK, EE, ES, FI, FR, GB, GR, HR, HU, IE, IS, IT, LT, LU, LV, MC, MK, MT, NL, NO, PL, PT, RO, RS, SE, SI, SK, SM, TR), OAPI (BF, BJ, CF, CG, CI, CM, GA, GN, GQ, GW, KM, ML, MR, NE, SN, TD, TG).