Brookhaven National Laboratory

U.S. DEPARTMENT OF ENERGY

Cryogenic Readout Electronics in the DUNE experiment

Hanjie Liu

on behalf of the DUNE Collaboration

Workshop on Superconducting Electronics and Detectors

11/29/2022

@BrookhavenLab

Outline

- Overview of the DUNE experiment and cryogenic readout
- Design of the cryogenic readout and performance
- Quality control of the cryogenic electronics production
- Summary

DUNE experiment

- Long baseline accelerator neutrino experiment

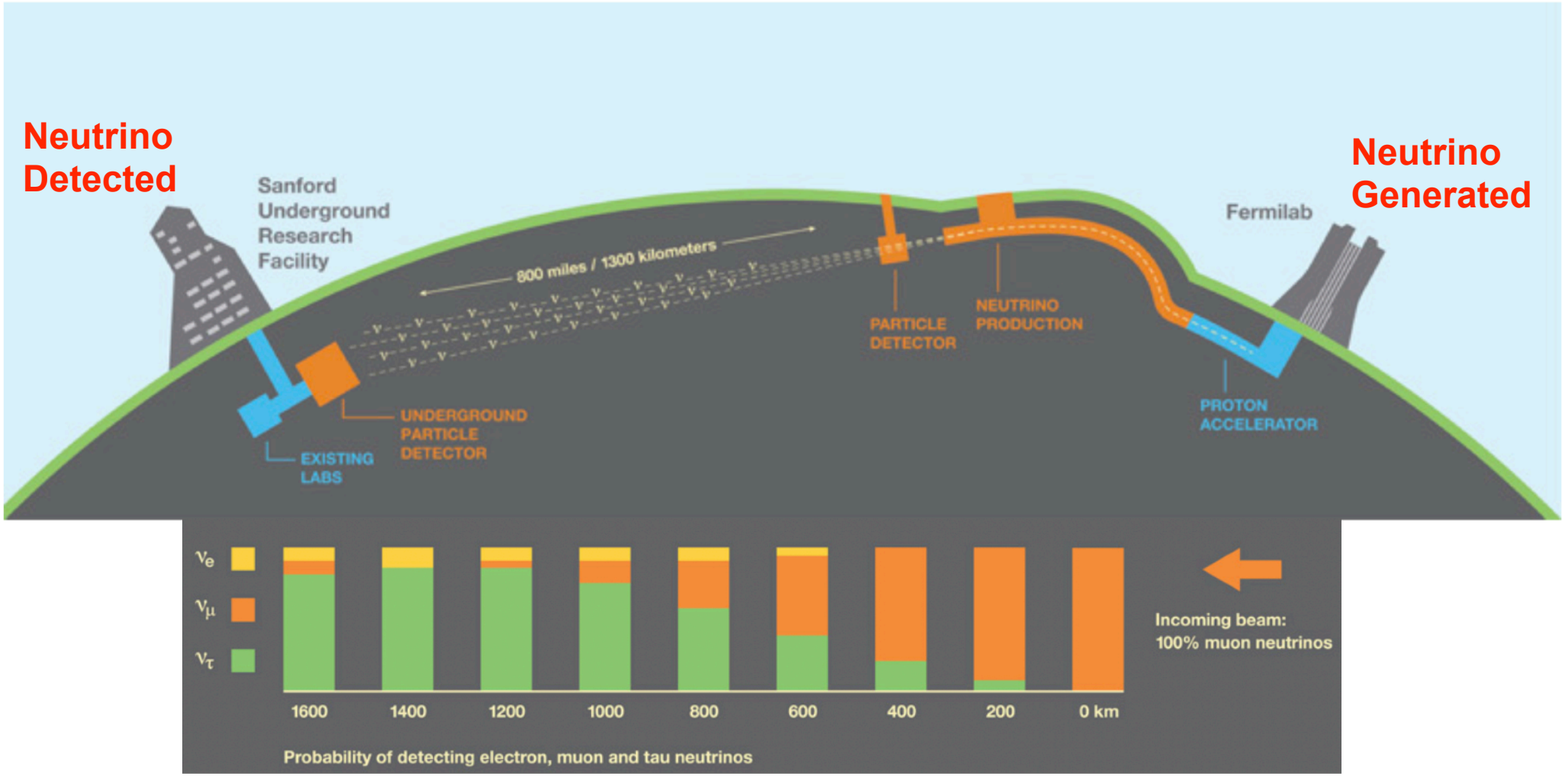

Primary Physics: Neutrino Oscillation

DUNE experiment

- Long baseline accelerator neutrino experiment

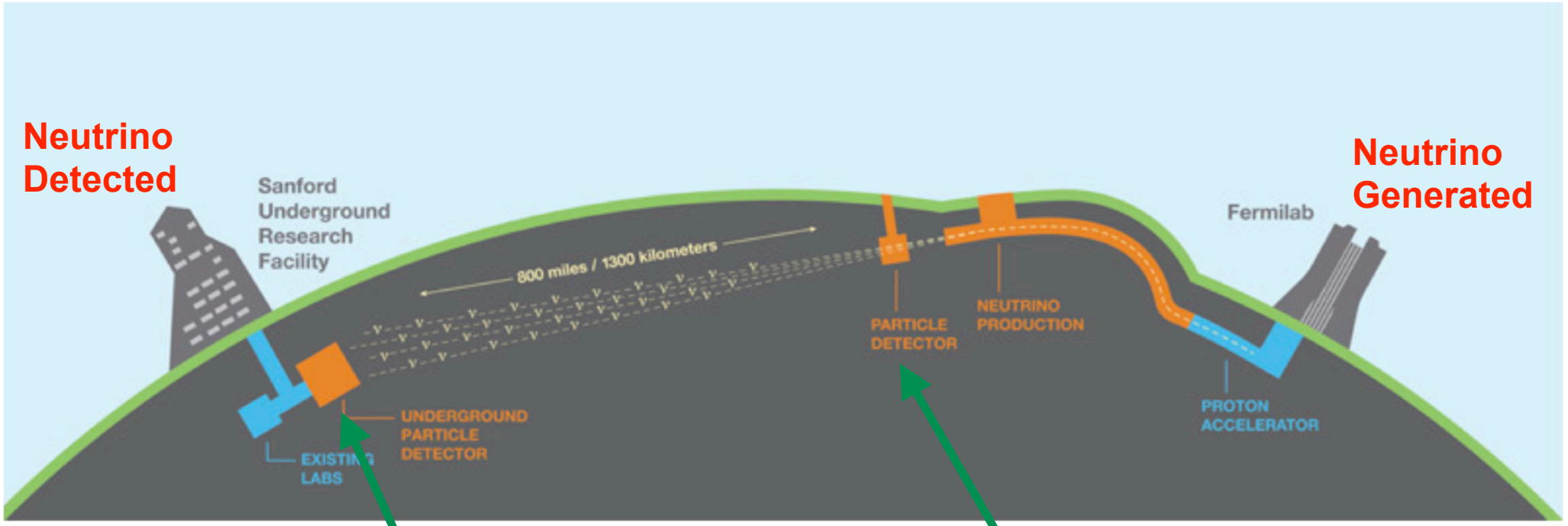

Far Detectors

- **Neutrino oscillation**
- **Leptonic CP violation**
- **Supernova burst**
- **Proton decay**

Near Detectors

- **Neutrino-Nucleus interaction**

…

DUNE Far Detectors

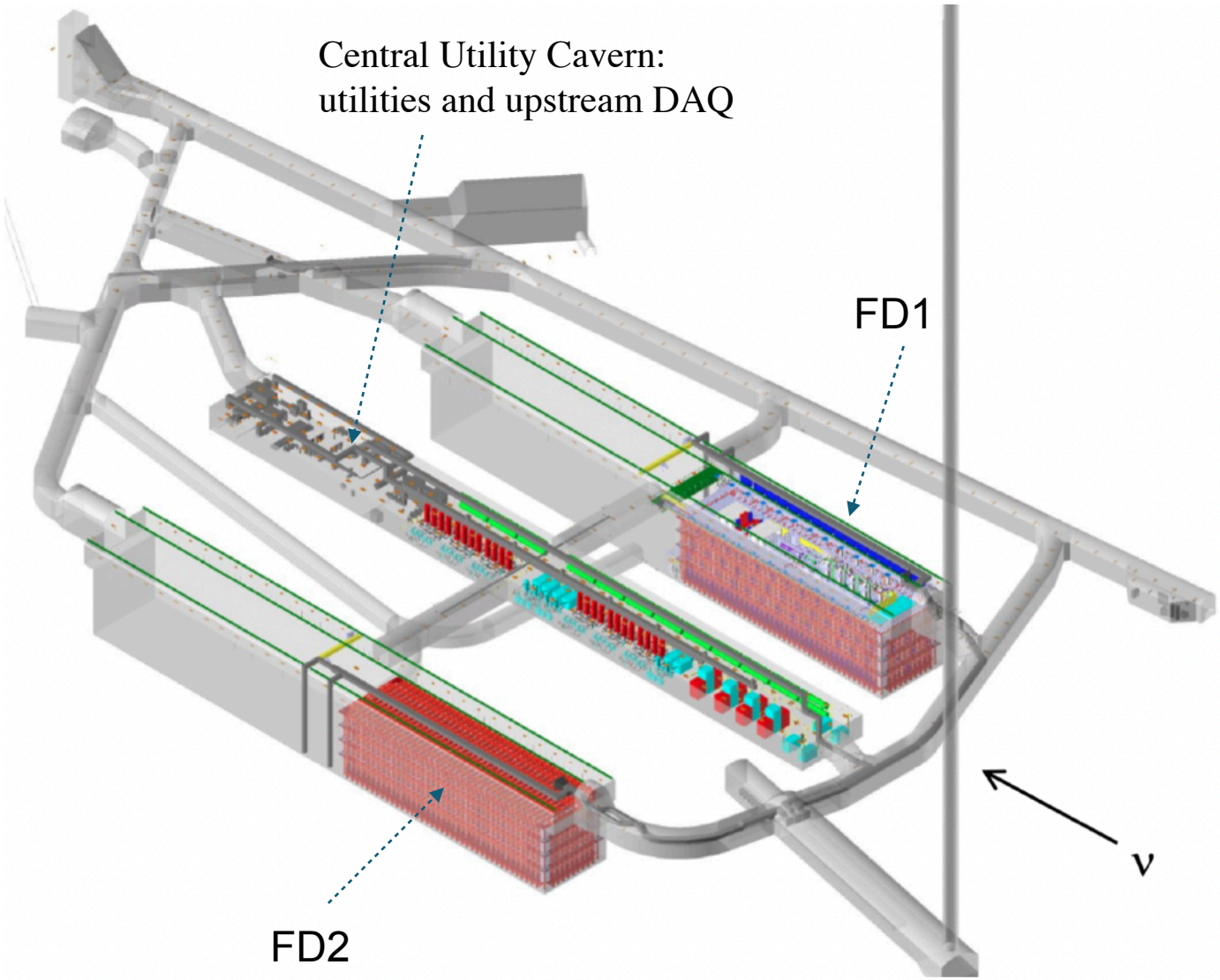

- 4850 ft underground
  - Sanford Underground Research Facility (SURF) in South Dakota
- Four detectors (10kt each):
  - May have four different designs
- Multiple phases
  - First two detectors will start operation around 2027
  - Both of them are Liquid Argon Time Projection Chambers (LArTPCs)
  - FD1 - Horizontal Drift LArTPC
  - FD2 - Vertical Drift LArTPC
  - Other two detectors are to be determined

FD1 - Horizontal Drift LArTPC

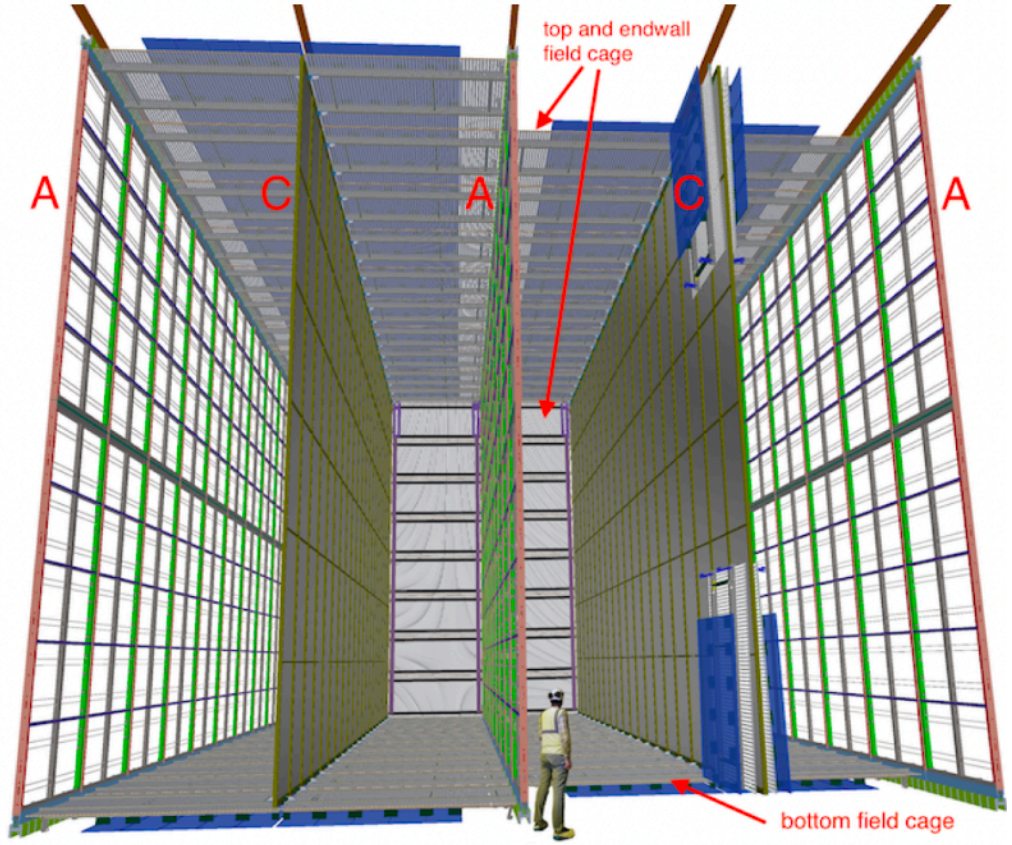

A 10 kt DUNE FD SP module

- **Anode plane :**

four layers of wires: G (-665 V), U (-370 V), V (0 V), X (820 v)

- **Cathode plane (-180 kV)**

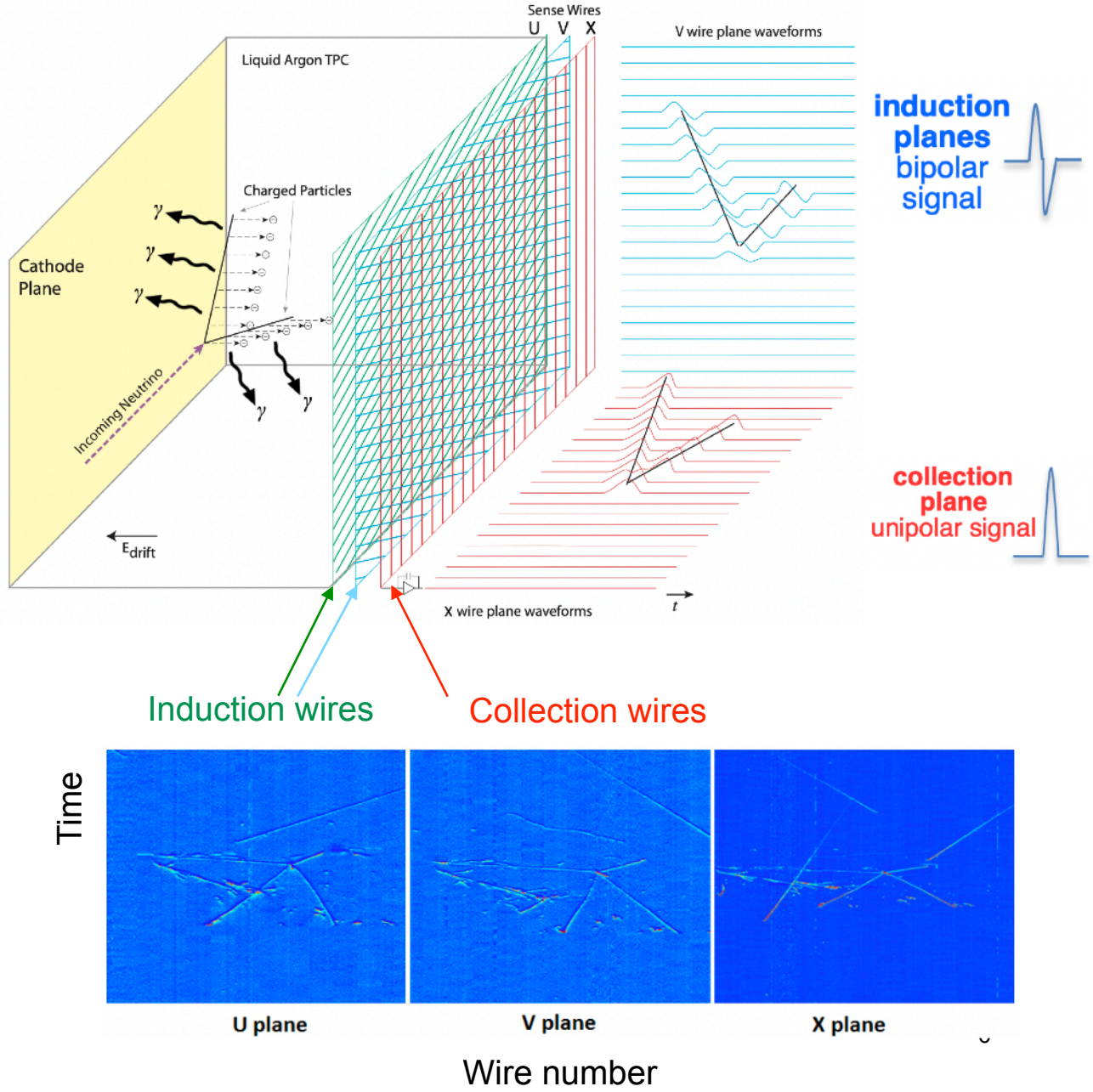

FD1 - Horizontal Drift LArTPC

Anode plane assembly

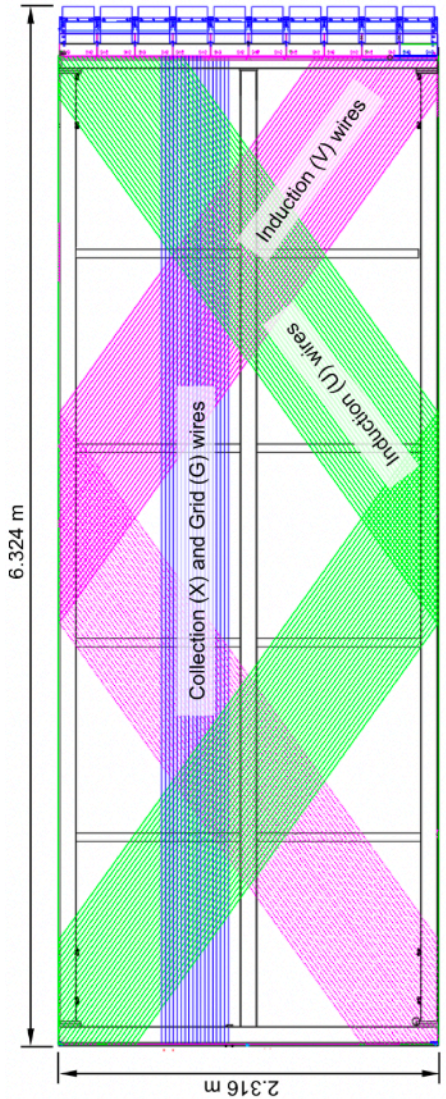

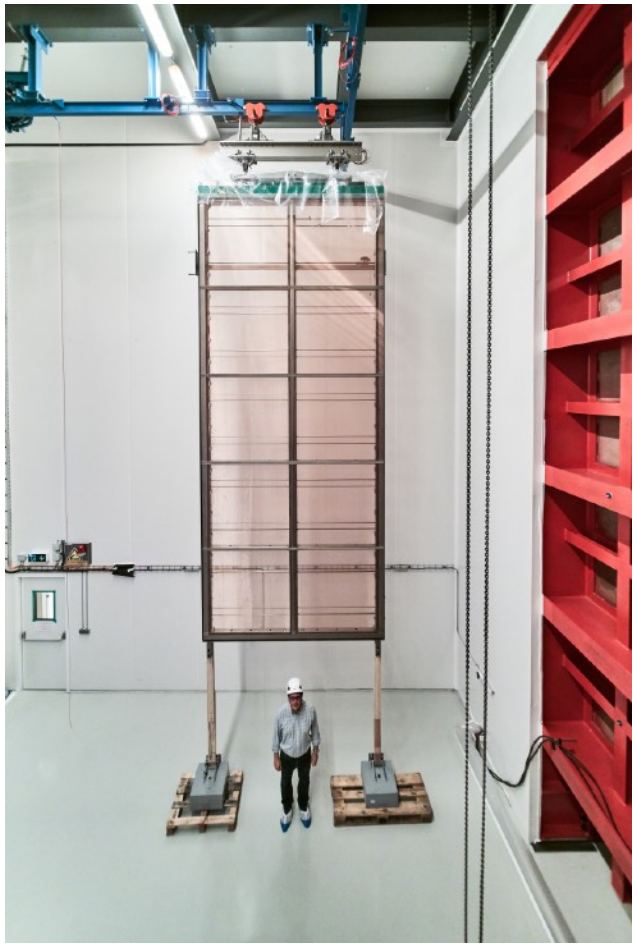

A pair of APAs make up an unit of the Anode wall

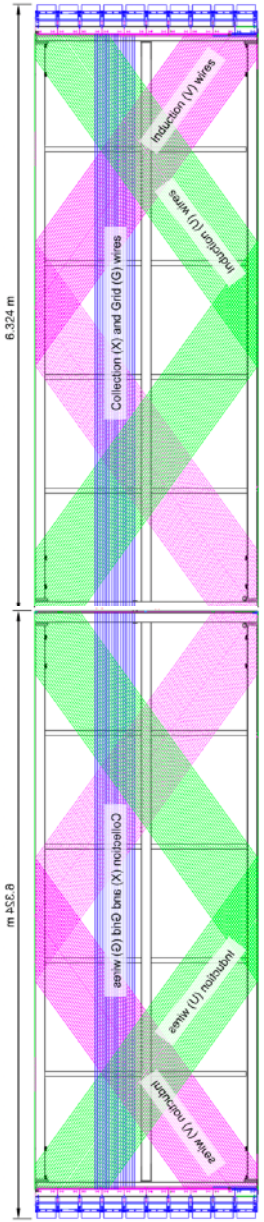

- $S/N \propto dE/dx$

—> Calorimetry

—> Particle identification

- Minimum-ionizing particle:

~ 20k-30k e- per channel

—> noise below 1000 e-

—> linear up to 500k e-

- Readout electronics of LArTPC are immersed in LAr and are directly mounted on APA

—> good S/N ratio (> 9)

FD1 - Cold Electronics

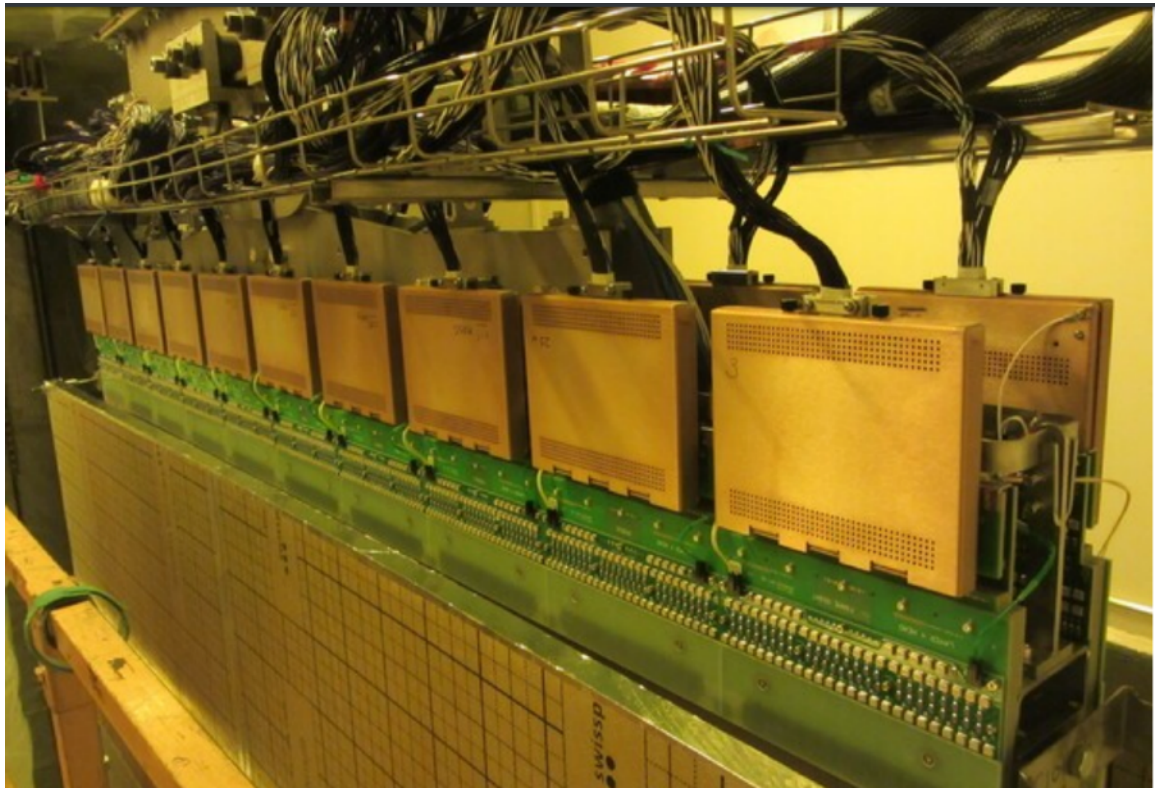

Cryogenic electronics at the top APA

Cryogenic electronics at the Bottom APA

Brookhaven National Laboratory

FD1 - Cold Electronics

- Readout electronics of LArTPC are immersed in LAr and are directly mounted on APA —> good S/N
- Components of cold electronics
  1. In LAr (~ 87K)
     - Front-end Mother Board (FEMB)
     - Cold cables
  2. Outside of cryostat
     - CE Flange
     - Warm Interface Electronics Crate (WIEC)
       - Warm Interface Board (WIB)
       - Power and Timing Card (PTC)
       - Power and Timing Backplane (PTB)

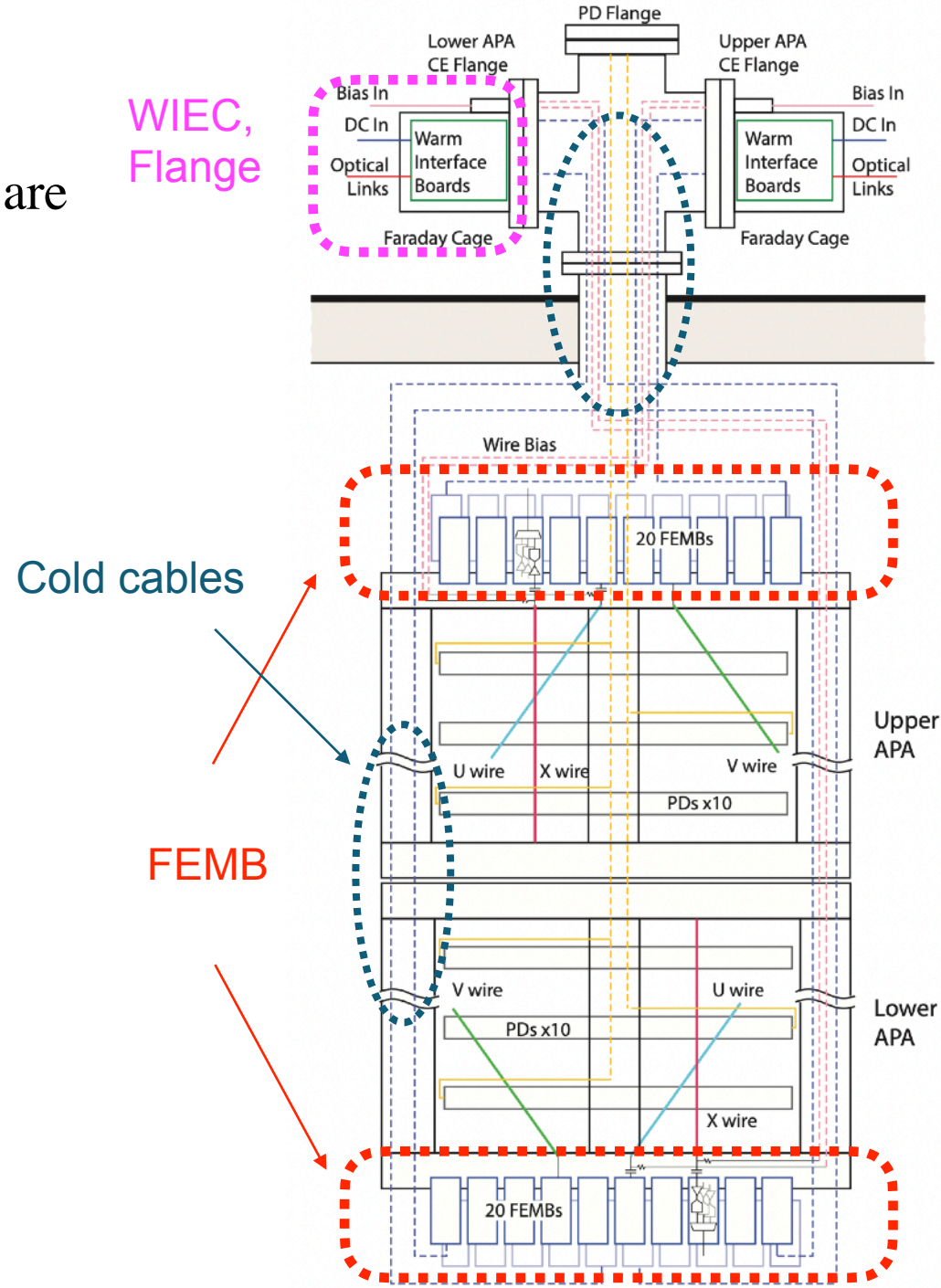

Brookhaven National Laboratory

FD2 - Vertical Drift LArTPC

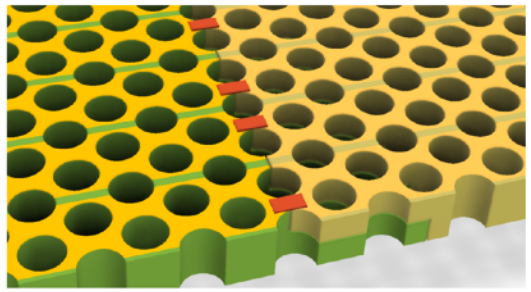

Charge readout planes (CRP)

Use Warm electronics

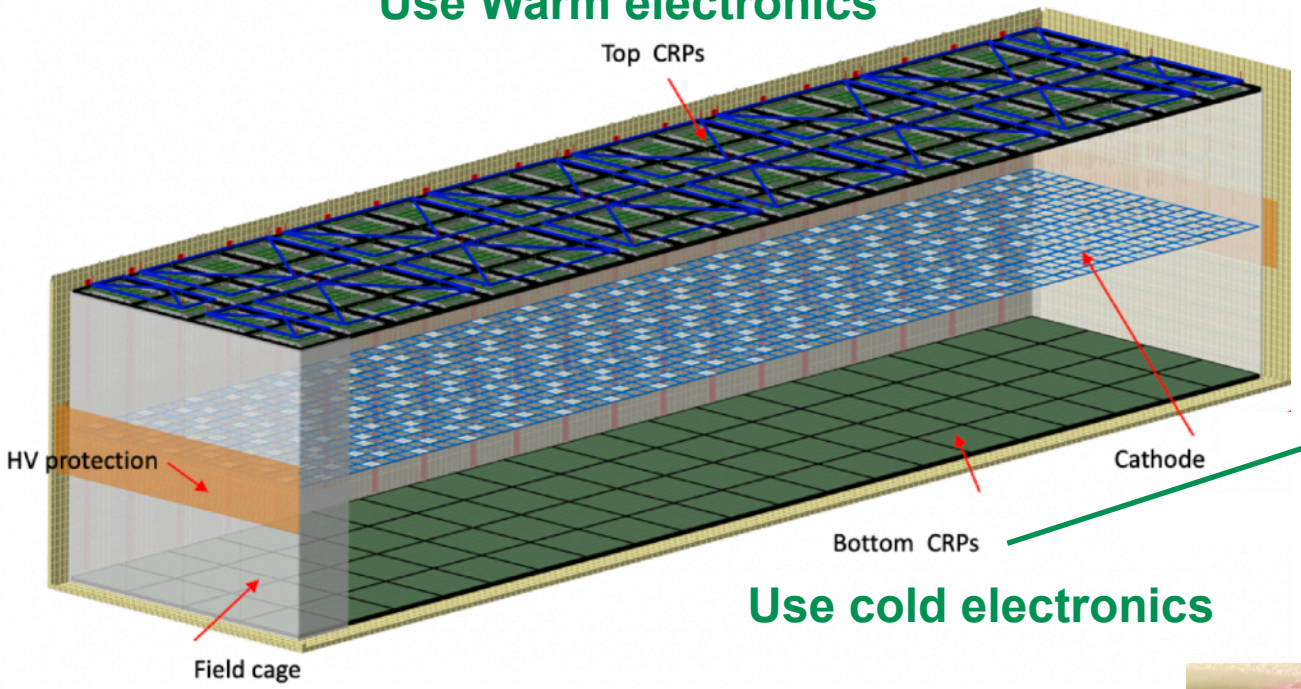

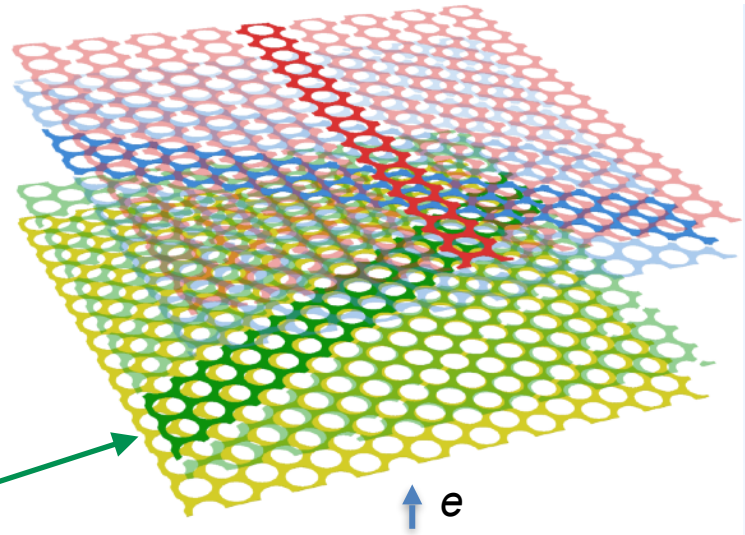

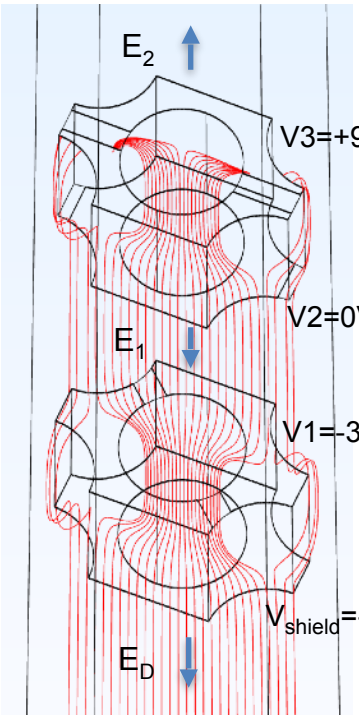

Use cold electronics

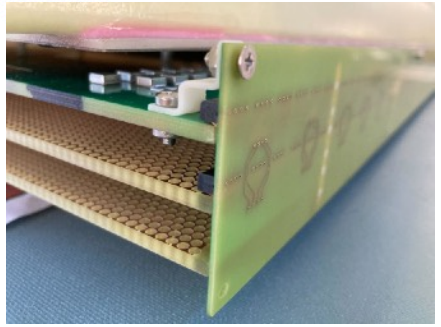

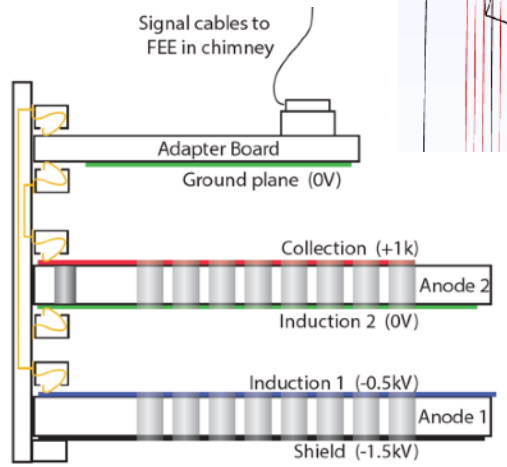

- Bottom CRPs: Three view two double-sided perforated PCBs
- U(-500V), V (0V), X(1000V)
- Similar to Gas Electron Multiplier (GEM)

FD2 Bottom CRP - Cold Electronics

- Almost identical to FD1,
- Difference: Patch Panel, MINI-SAS cable, longer power cable and data cable

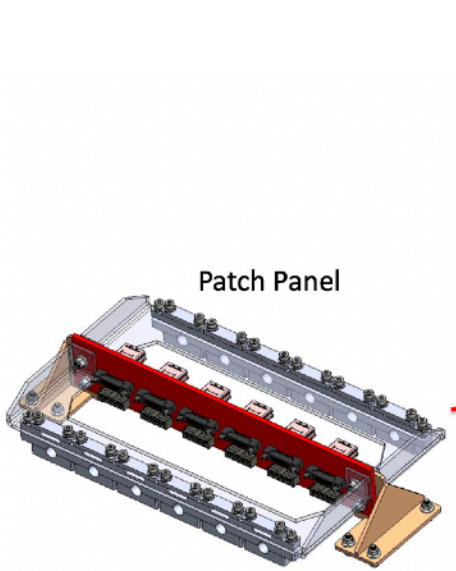

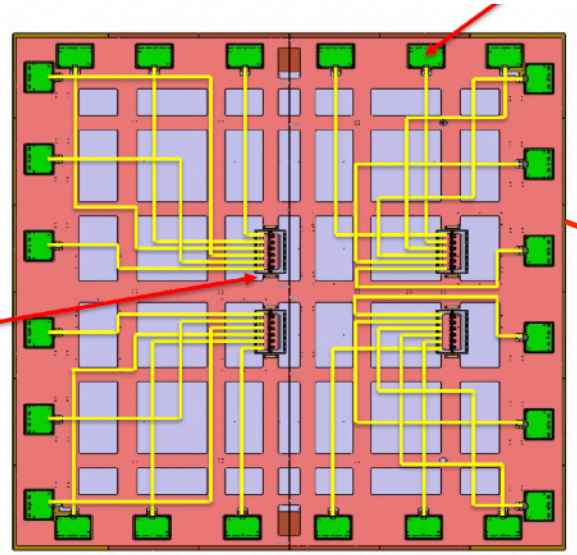

CRP

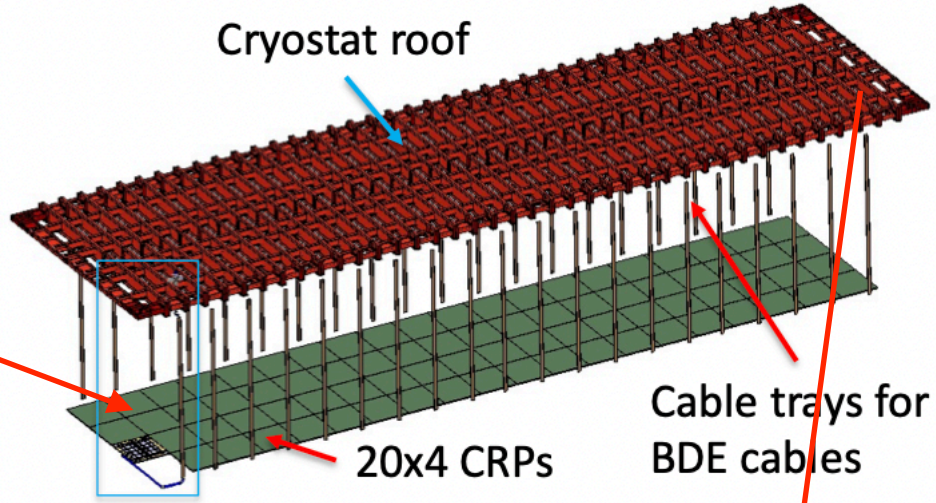

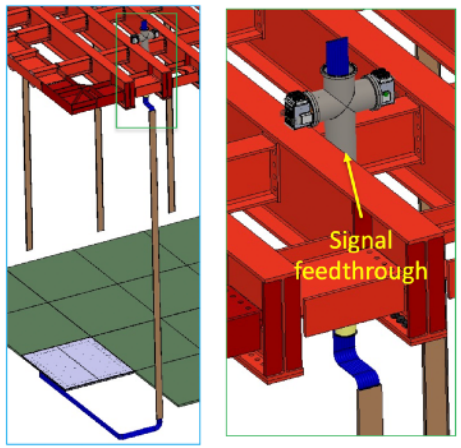

WIEC

Cold Electronics System

WIB: connect to
4 FEMBs

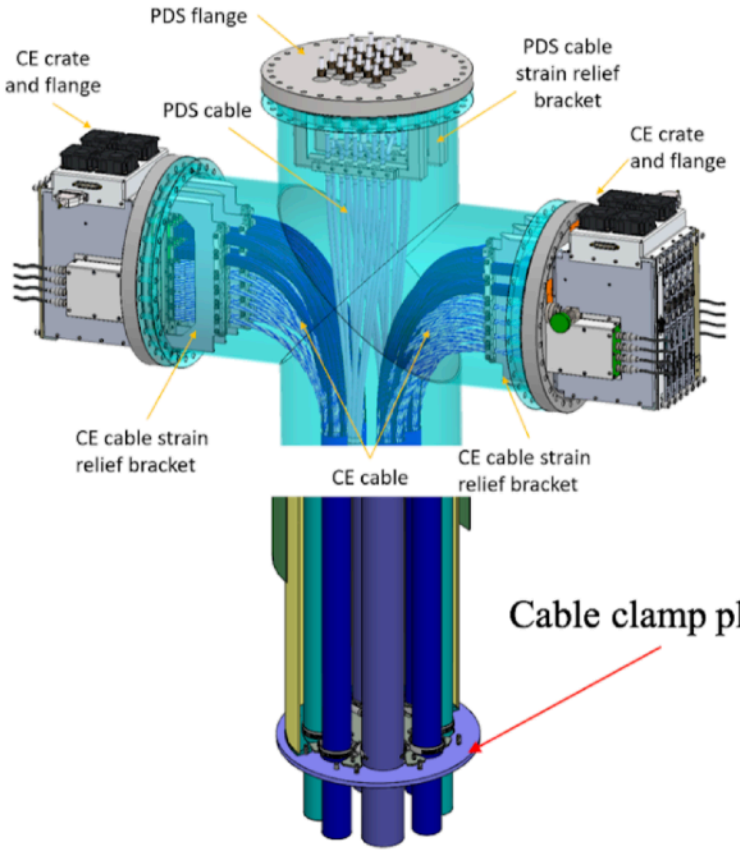

5 WIBs in one
CE crate

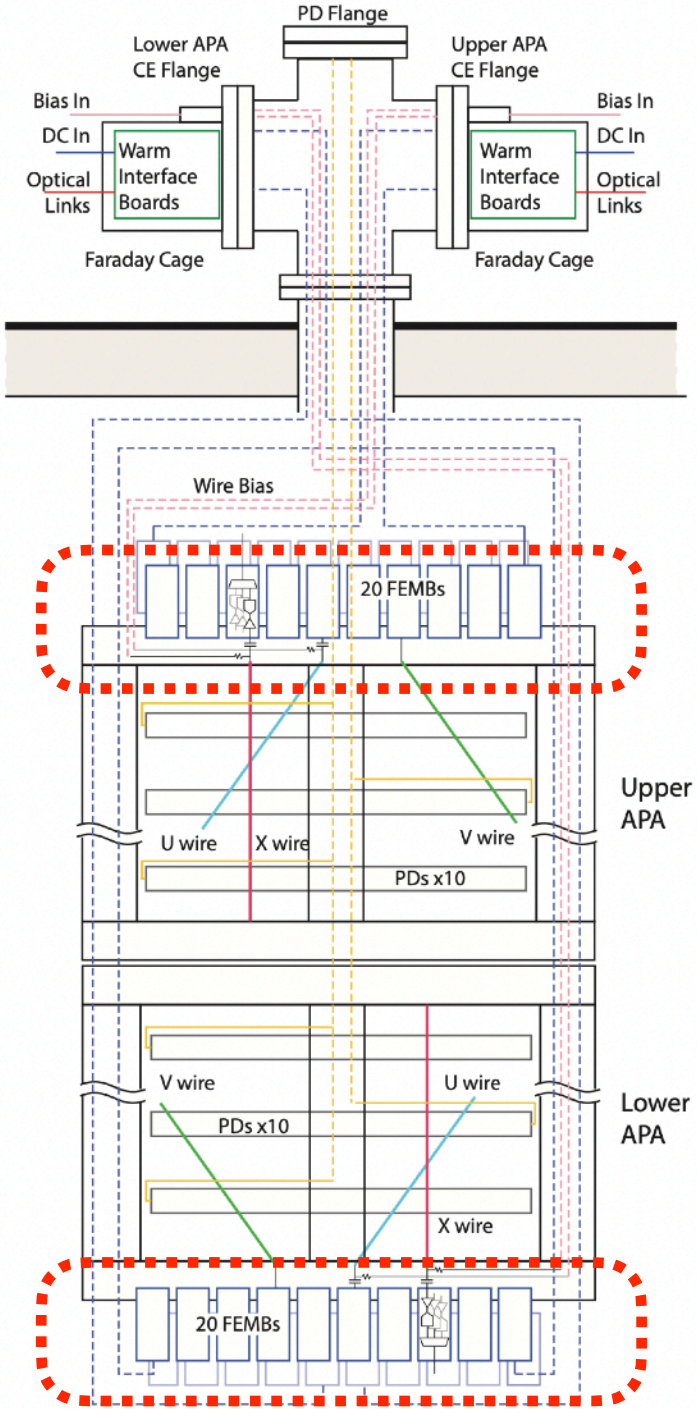

FEMB
in a CE box
with adapter

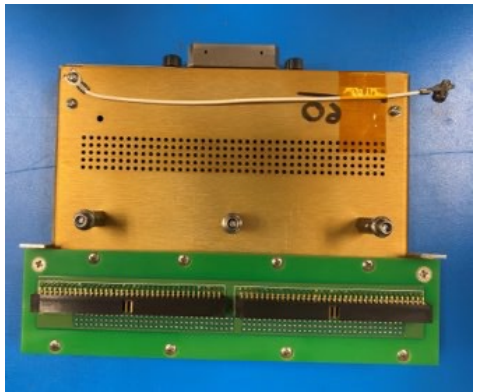

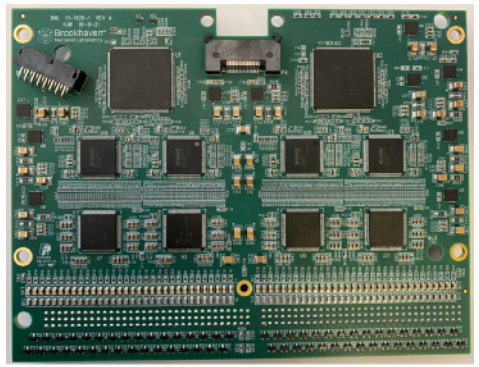

20 FEMBs
per APA

Front-End Mother Board (FEMB)

LArASIC

16 channels, pulse amplification and shaping ASIC; 4 gains 4.7 to 25 mV/fC; 4 peaking times 0.5, 1, 2, 3 us; 2 baselines;

ColdADC

16 channels 14 bit ADC ASIC with digitized rate ~ 2MHz; pipelined ADCs operating at 16 MHz.

COLDATA

64 channels, data merging, control and communication ASIC; two 1.25 Gbps links

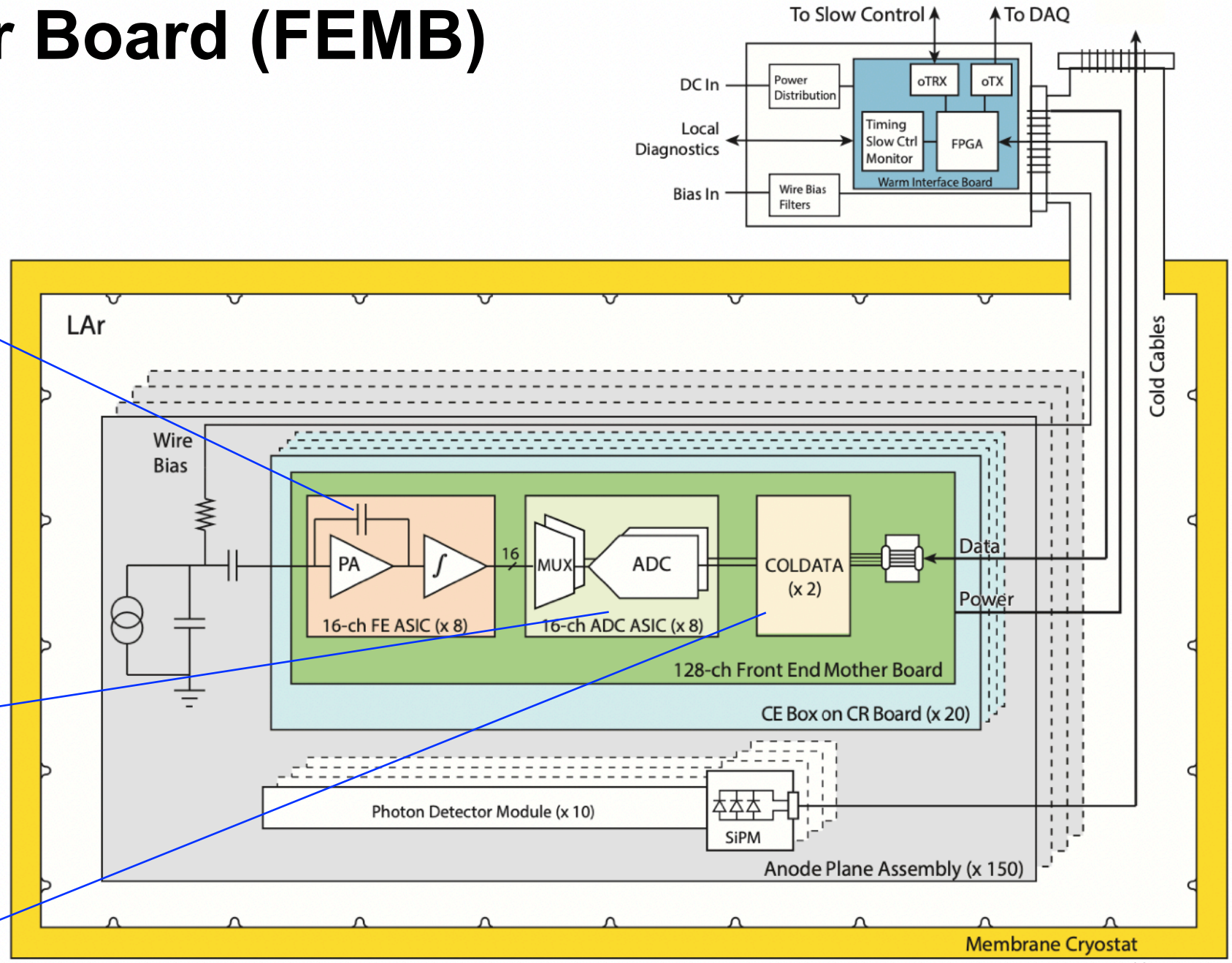

B. Abi *et al* 2020 *JINST* **15** T08010

Front-End Mother Board (FEMB)

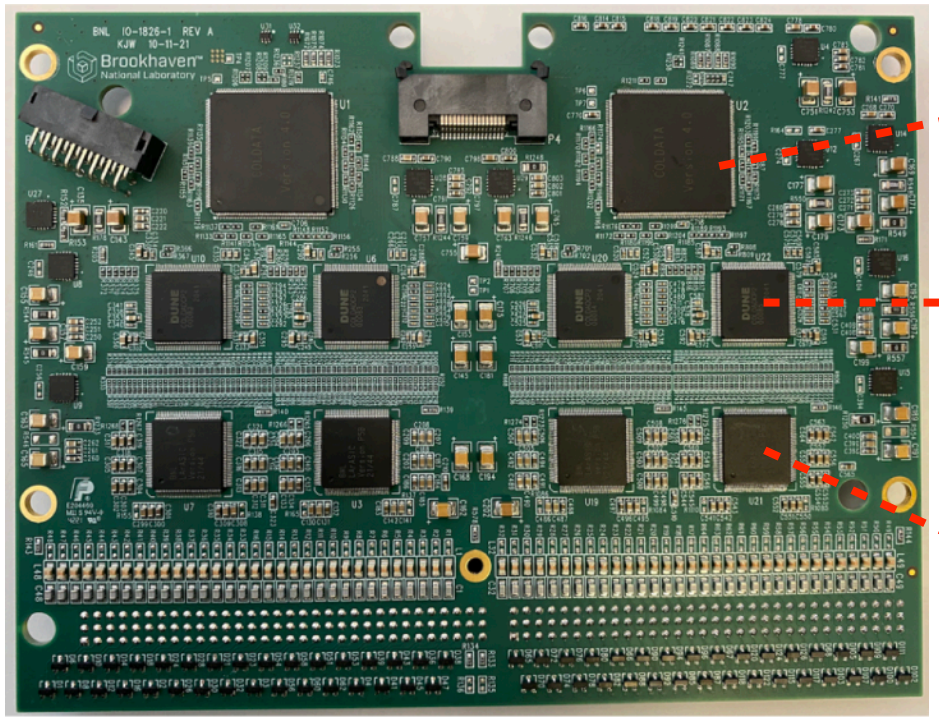

COLDATA x 2 — Control & Communications

ColdADC x 8 — Analogue to digital

LArASIC x 8 — Shaping & amplification

- 128 channels, read 40 U wires, 40 V wires, and 48 X wires
- 2 baselines, 4 gains, 4 peaking time
- 4 data links with 1.25 Gbps each
- Power consumption: < 50 mW/channel in LAr
- Equivalent Noise Charge ~ 600 e- in LAr

Challenges of Cold Electronics

- Operate in liquid Argon (87K)
- A huge number of electronics and cables, mechanical parts etc.
- Long lifetime ~ 20 years
- Dead channels <1%

Requires dedicated Quality Control (QC) tests for each components

- Multiple test sites
- Standard QC procedures
- QC Results will be stored in a hardware database

Challenges of Cold Electronics Production

- 20 FEMBs per APA, and 24 FEMBs per CRP
- 4 FEMBs per WIB
- Each FEMB: 8 LArASIC, 8 ColdADC, 2 COLDATA

ProtoDUNE-II HD

- 4 APAs
- 80 SAMTEC FEMBs
- 20 WIBs
- 640 LArASIC chips
- 640 ColdADC chips
- 160 COLDATA chips

Finished

ProtoDUNE-II VD BDE

- 2 CRPs
- 48 MINI-SAS FEMBs
- 12 WIBs
- 384 LArASIC chips
- 384 ColdADC chips
- 96 COLDATA chips

Happening Now

DUNE FD1 + FD2-BDE

- 150 APAs, 80 CRPs
- 3000 SAMTEC FEMBs
- 1920 MINI-SAS FEMBs
- 1230 WIBs
- 39360 LArASIC chips
- 39360 ColdADC chips
- 9840 COLDATA chips

A huge amount of electronics!

Haven't counted the cables and others yet !

LArASIC Quality Control

- A detailed checkout script generates a QC report for each chip (~ 7 minutes per chip)
- QC tests are performed both in room temperature and in liquid Nitrogen (LN2)
- Immersing electronics into LN2 and warm up afterwards each takes about 30 minutes
- Test multiple electronics in one run saves time

automated Cryogenic Test System

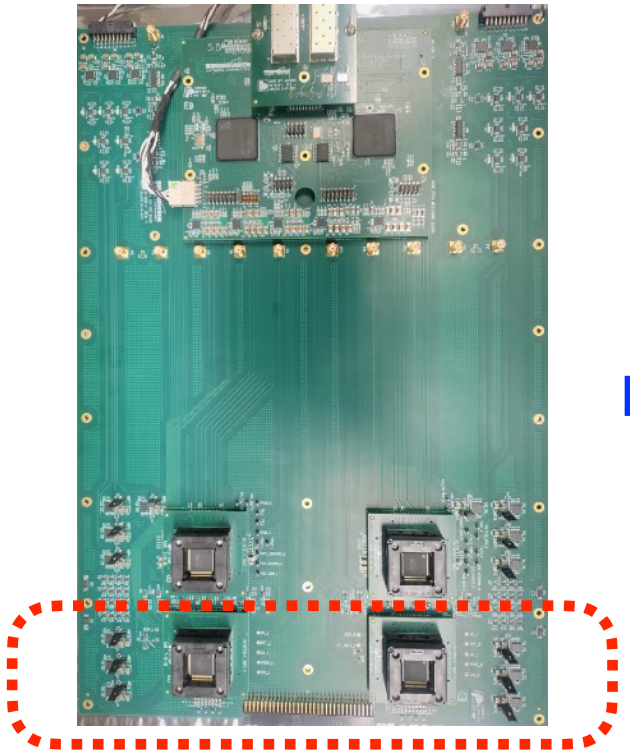

DUAL-DUT board

- Test two LArASIC chips per run

LArASIC Quality Control

- A detailed checkout script generates a QC report for each chip (~ 7 minutes per chip)
- QC tests are performed both in room temperature and in liquid Nitrogen (LN2)
- Immersing electronics into LN2 and warm up afterwards each takes about 30 minutes
- Test multiple electronics in one run saves time

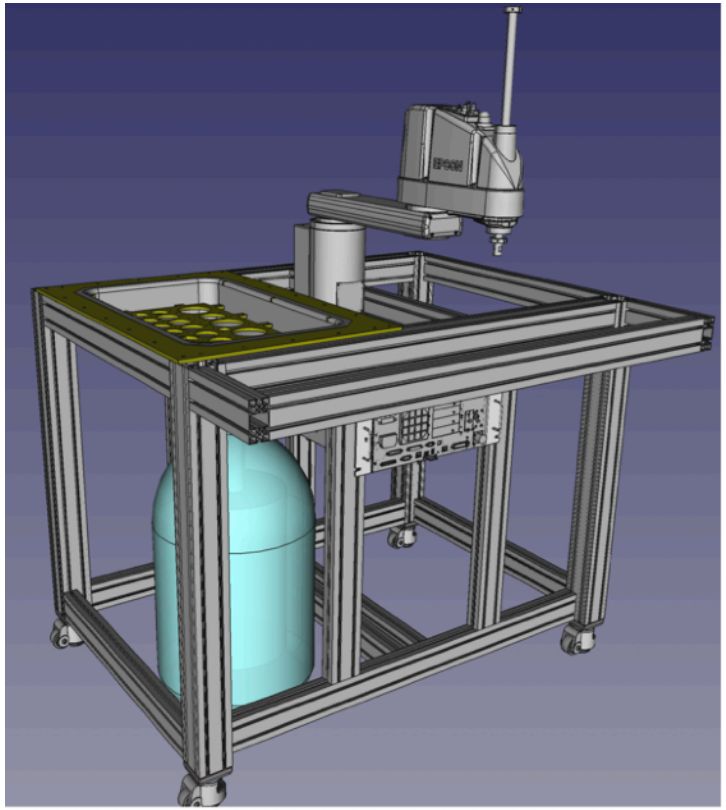

Robotic Test System

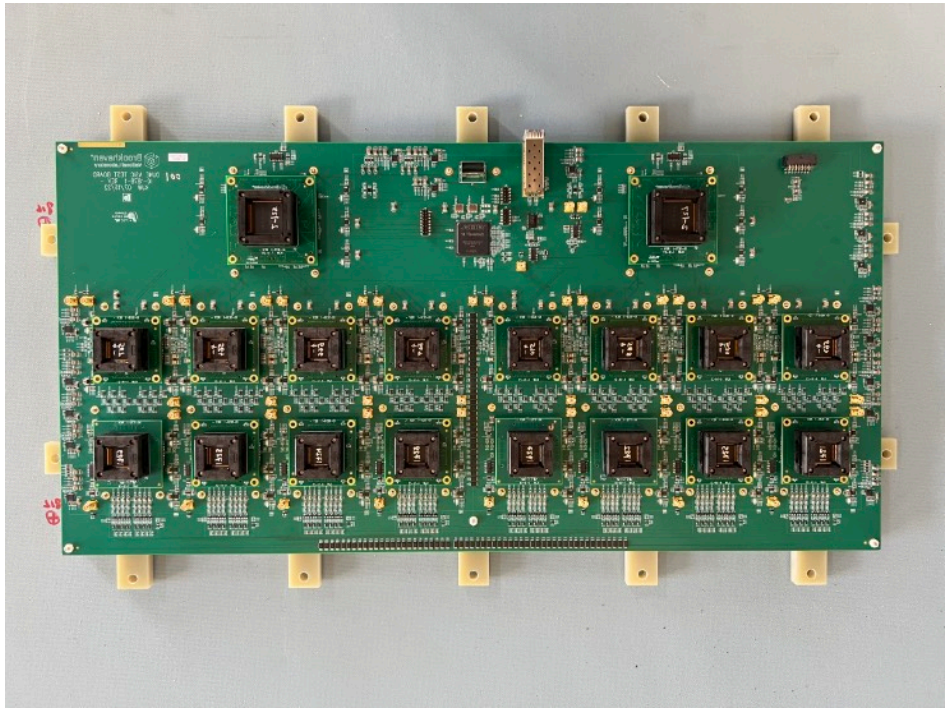

DAT

- Test 2 COLDATA, 8 ColdADC, 8 LArASIC per run

FEMB QC Procedures

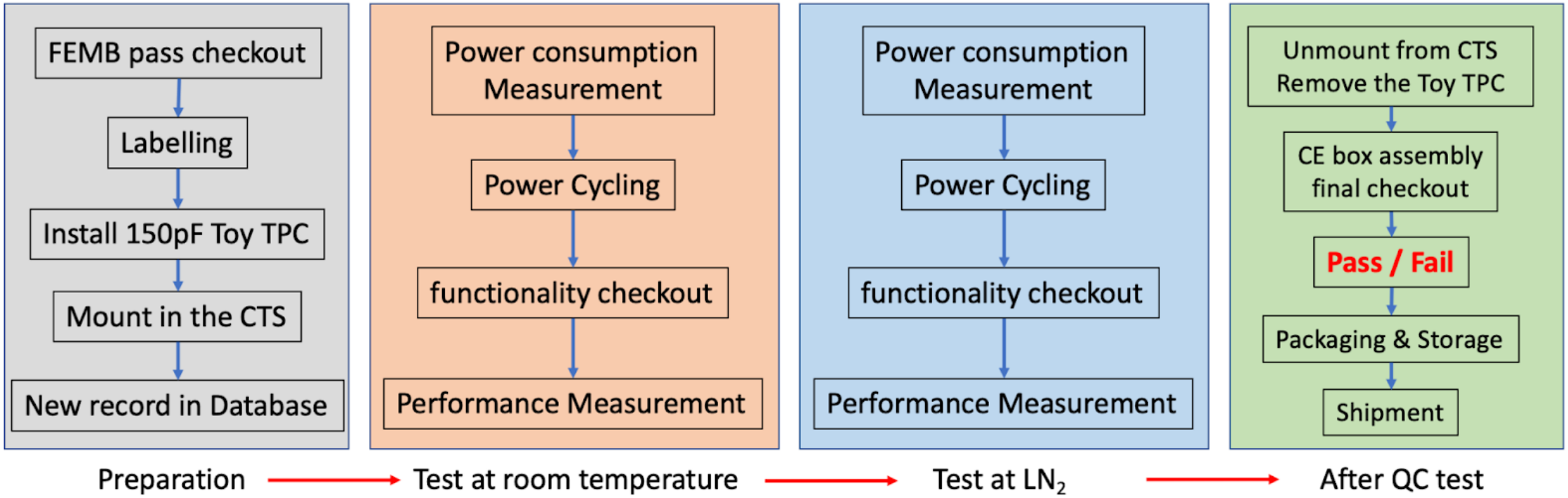

- Four FEMBs are tested at the same time

Cold Electronics Performance in ProtoDUNE

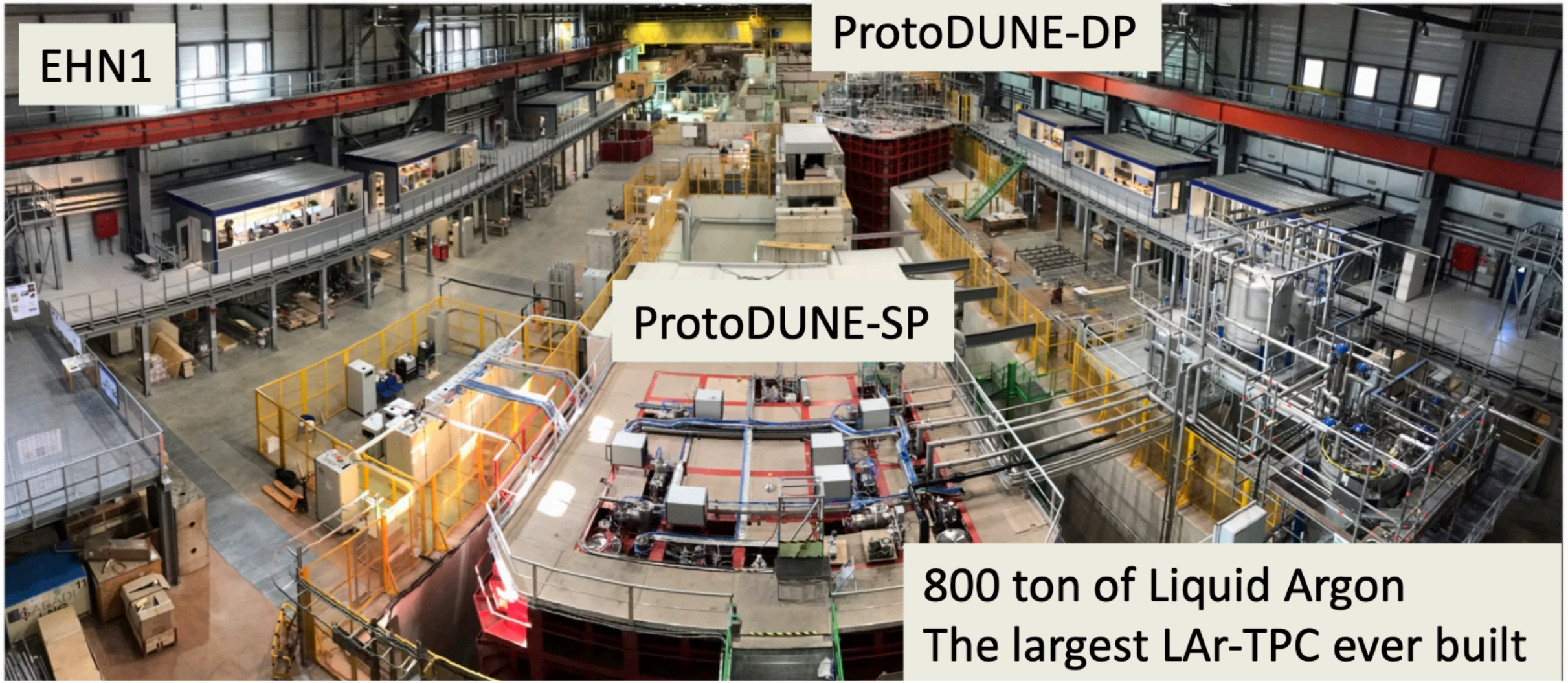

@CERN

Cold Electronics Performance in ProtoDUNE

- **ProtoDUNE-SP (2018-2020)**

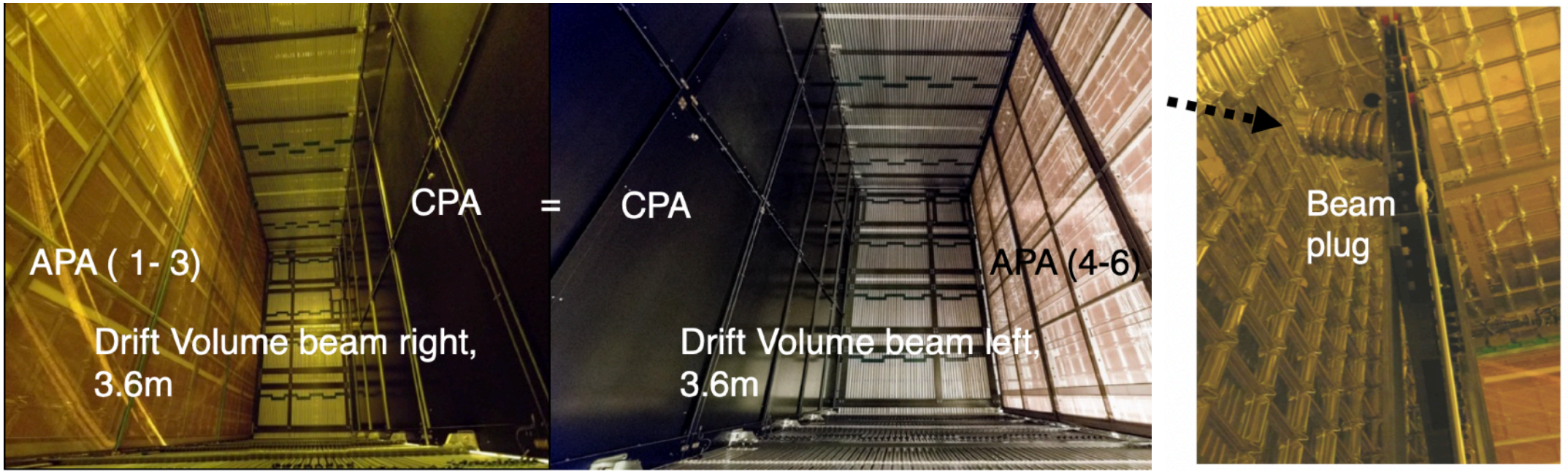

(0.3 – 7 GeV/c p/e^+/π^+/μ^+/K^+/ beam)

- Validate the the design of the integrated cold electronics readout
- Measure the performance of the electronics system
- 99.7% of the readout channels functioned properly
- The measured ENC for a collection wire is about 550e-, and for an induction wire is about 650e-
- S/N ~ 38 for collection wires, and S/N~ 14 (U), ~17 (V)

Cold Electronics Performance at ProtoDUNE

- **ProtoDUNE II (installation is ongoing, start operation in 2023)**
  - The prototype detectors are arranged similar to the final Far Detector
  - New versions ColdADC and COLDATA are implemented
  - LArASIC has been further improved
  - Engineering and integration have been further advanced
  - Vertical Drift LArTPC will be tested as well

Summary

- Cryogenic electronics readout is critical to reach the LArTPC performance goal
- The cryogenic electronics are mounted directly on the detectors, the performance exceeds the DUNE experiment requirements
- The cryogenic electronics will be tested in protoDUNE-II
- Dedicated QC tests are designed to ensure the delivery of high quality components to DUNE