Hall A and C Polarimetry Upgrades

Dave Gaskell

Jefferson Lab

Hall A/C Collaboration Meeting

July 8-9, 2021

Jefferson Lab

U.S. DEPARTMENT OF ENERGY | Office of Science

JSA

Outline

- Hall A/C Polarimetry Overview
- Improvements to Hall A and Compton Polarimeters (HIPPOL)
- Hall A Møller tracking detectors
- New Hall C Møller target magnet

Hall A/C Polarimetry Overview - Compton

Hall A and C both have Compton polarimeters with similar (not identical) configurations

Key components:

→ 4 dipole chicane

→ Fabry-Perot cavity-based laser system

→ Strip-based scattered electron detector

→ Back-scattered photon detector

Both systems used during 6 GeV program → updated for 11 GeV operation

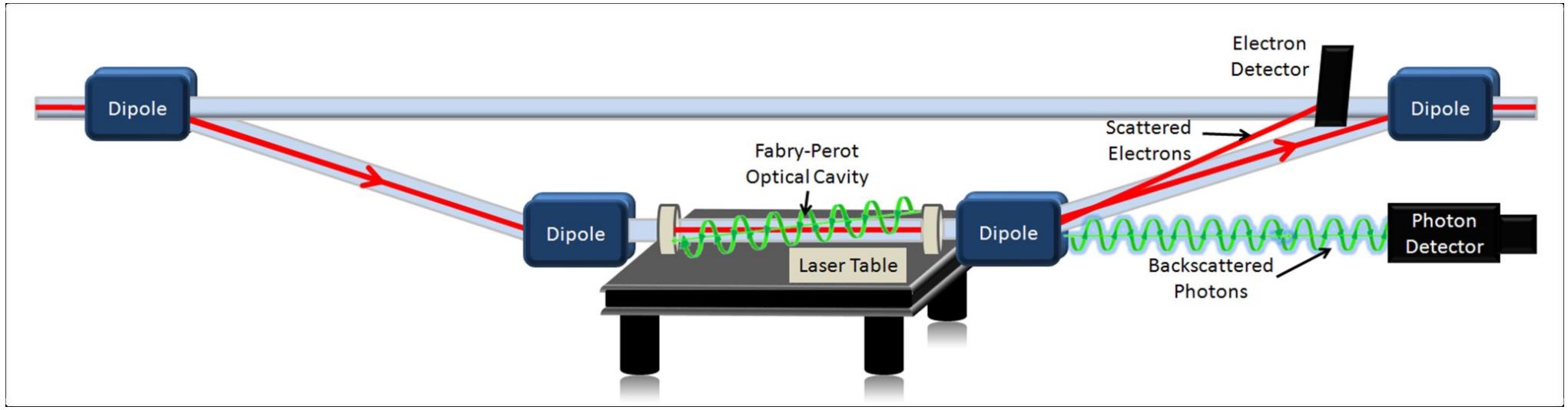

Hall A/C Polarimetry Overview - Compton

Hall A Compton:

→ Installed at start of Hall A program

→ Laser system, photon detector upgraded for PREX-1

→ Electron detector also updated, but suffered from poor performance after

Hall C Compton:

→ Installed after several years of Hall C running, for Q-Weak (2010)

→ Applied many lessons learned from Hall A

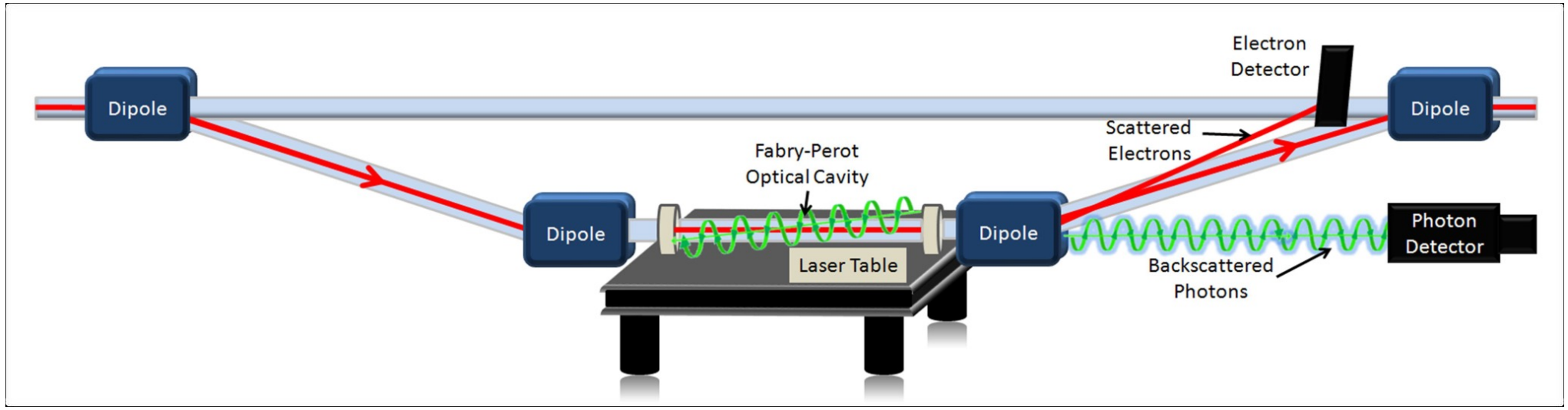

Hall A/C Polarimetry Overview - Møller

Hall A and C Møller polarimeters have some similar properties but different spectrometer designs
→ Both use high-field (~4 T) split-coil magnets to polarize electrons in pure iron target out-of-plane
→ Detect scattered and recoil electrons in coincidence to suppress Mott backgrounds

Hall C: 2(3) quadrupole optics allows same tune for all beam energies (reduce systematics)
Hall A: 3(4) quad + dipole → different optics at each energy, but allows more optimization to reduce corrections due to Levchuk effect

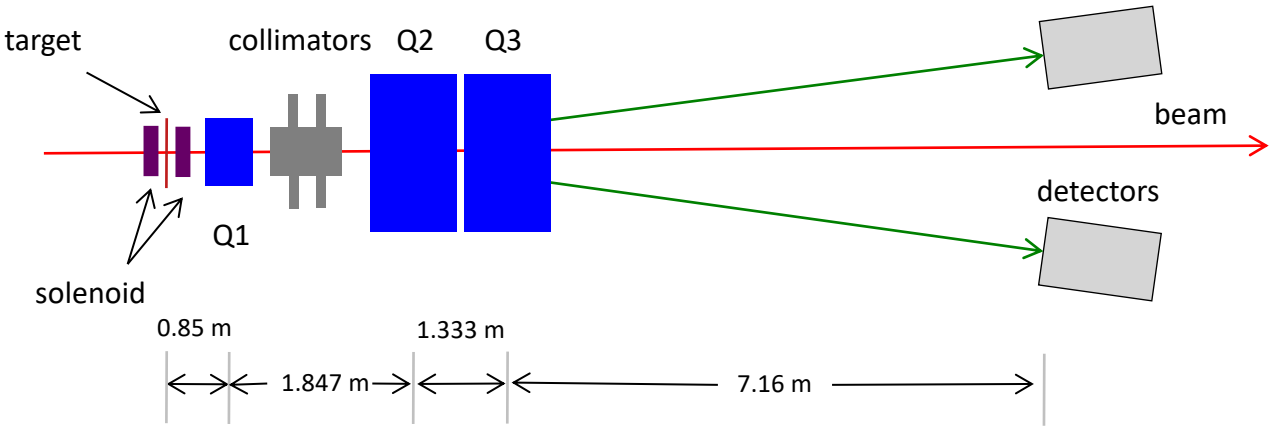

Hall C

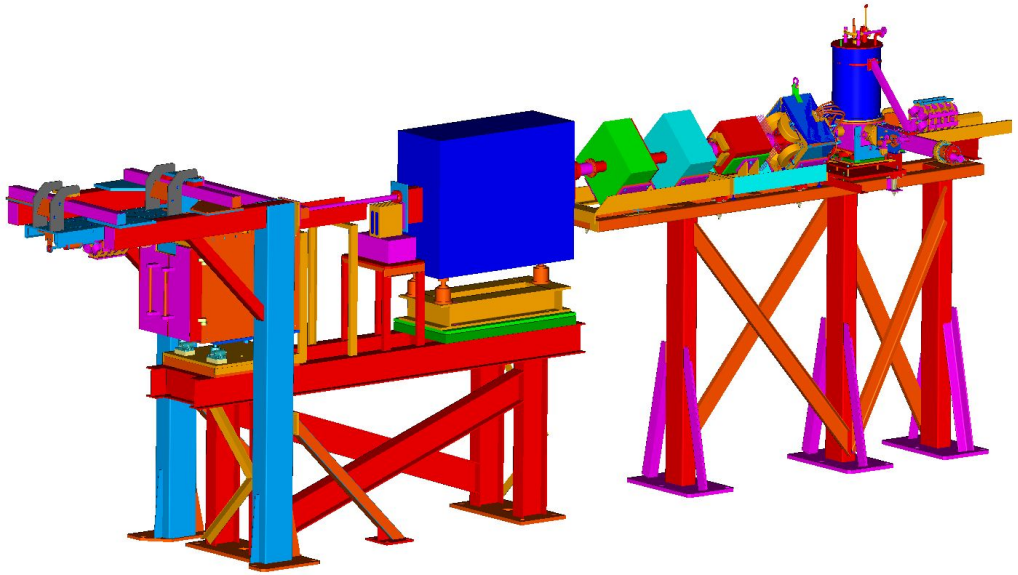

Hall A

Improvements to Hall A and C Polarimetry

- The polarimeters in Halls A and C have steadily improved precision since the start of the JLab program
- Need for high precision primarily driven by PVES experiments (HAPPEX, PREX, CREX, Q-Weak)
- Precision of dP/P ~ 1% almost “routine”

Experiment	Device	dP/P
HAPPEX-III	Compton (photon)	0.94%
PREX-1	Compton (photon)	1.1%
	Møller	1.2%
Q-Weak	Compton (electron)	0.6%
	Møller	0.85%
PREX-2	Møller	0.89%
MOLLER		**0.4%**
SOLID		**0.4%**

- Future/ongoing polarimetry improvements driven by:
  - Unprecedented precision required by MOLLER and SOLID
  - Standardization between halls
  - More reliable and robust operation

Compton Polarimetry - HIPPOL

- **Hi**gh **P**recision **Pol**arimetry capital project
- Ultimate goal: Compton polarimeters in Halls A and C with similar capabilities
  - Leverage available beamtime for systematic, functional tests
  - Use of same components allows for easier access to spares (fiber amplifiers, DAQ components, etc.)

- Scope:
  - Improve Hall C laser system to be similar to Hall A system (low gain cavity → high gain cavity) → components in hand
  - Larger electron detector for Hall C → needed for 11 GeV operation
  - New electron detector in Hall A
  - Update Hall C electron detector DAQ (VETROC system) → components in hand

Compton Laser System

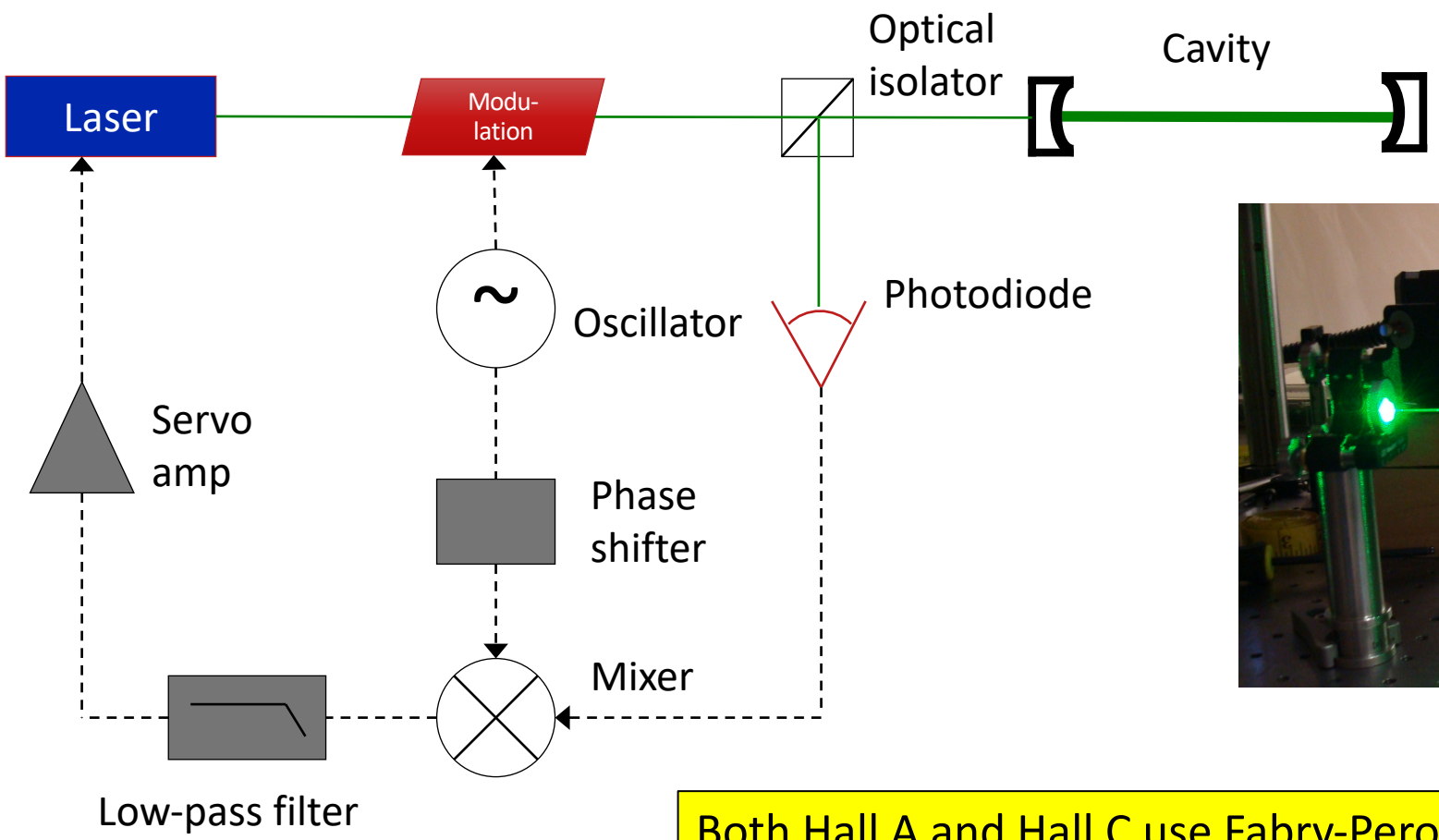

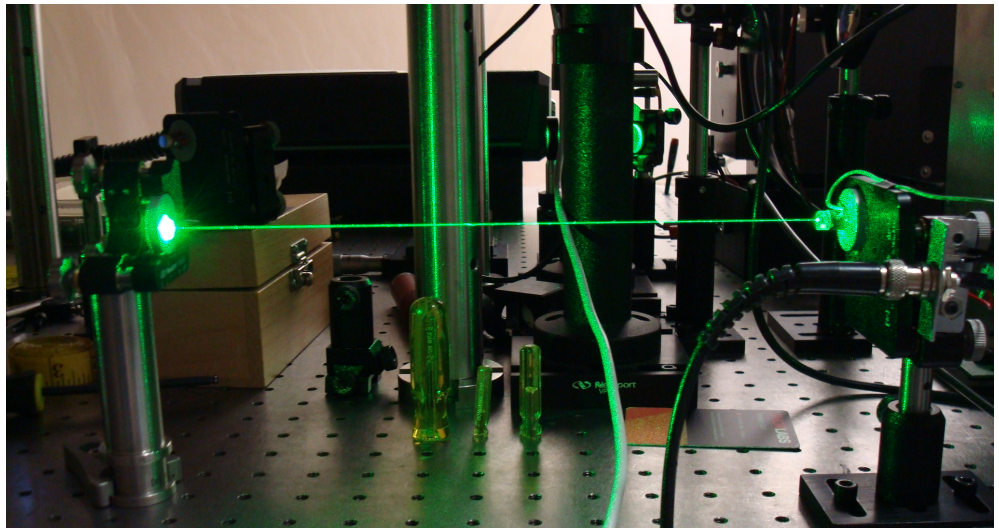

Both Hall A and Hall C use Fabry-Perot Cavity-based laser systems
→ Single pass laser powers too small to make rapid measurements
→ FP cavity with kW level stored powers required
→ Laser wavelength locked to cavity via Pound-Drever Hall technique

Hall A Laser System

Main components:

- Narrow linewidth 1064 nm seed laser
- Fiber amplifier (>5 W)
- PPLN doubling crystal
- High gain Fabry-Perot cavity
- Polarization manipulation/monitoring optics

Properties:

- 1 W laser power from doubling system
- Mirror reflectivity > 99.98%
- Cavity finesse >=13,000
- Stored power 2-10 kW

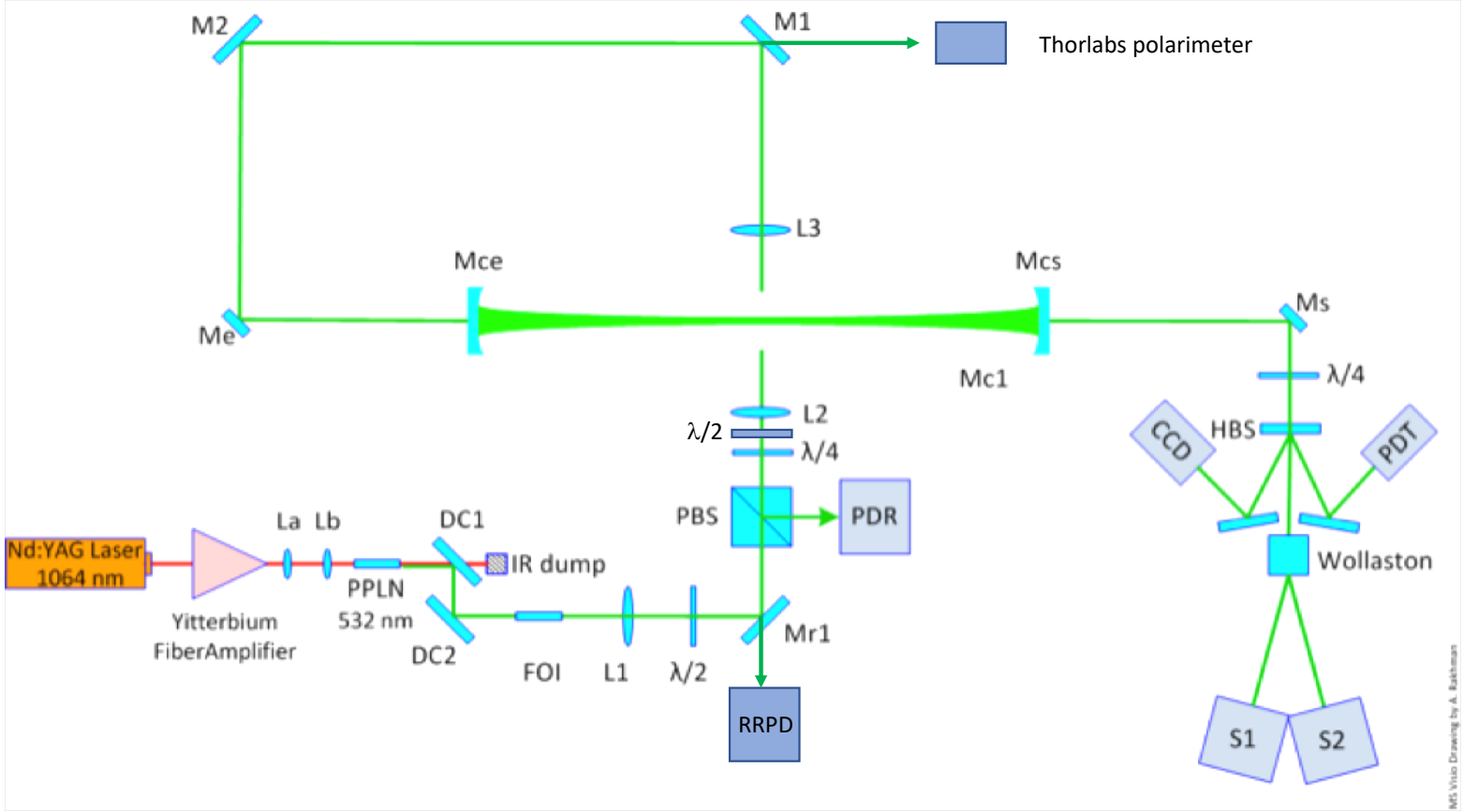

Hall C Laser System

Key differences with Hall A system:

- Higher power green laser → 10 W (Coherent VERDI)
- Large linewidth (1 MHz) means laser can't be used with narrow linewidth cavity
- Cavity mirrors = 99.5%
- Cavity gain = 200, stored power ~ 1.7 kW

Drawbacks:

- 1.7-2 kW is the ultimate upper limit without increasing laser power
- At 10 W, already ran into issues with distortion of beam shape when used with optical components
- Apparent thermal effects became significant towards end of Q–Weak run – possible damage to vacuum windows or mirrors

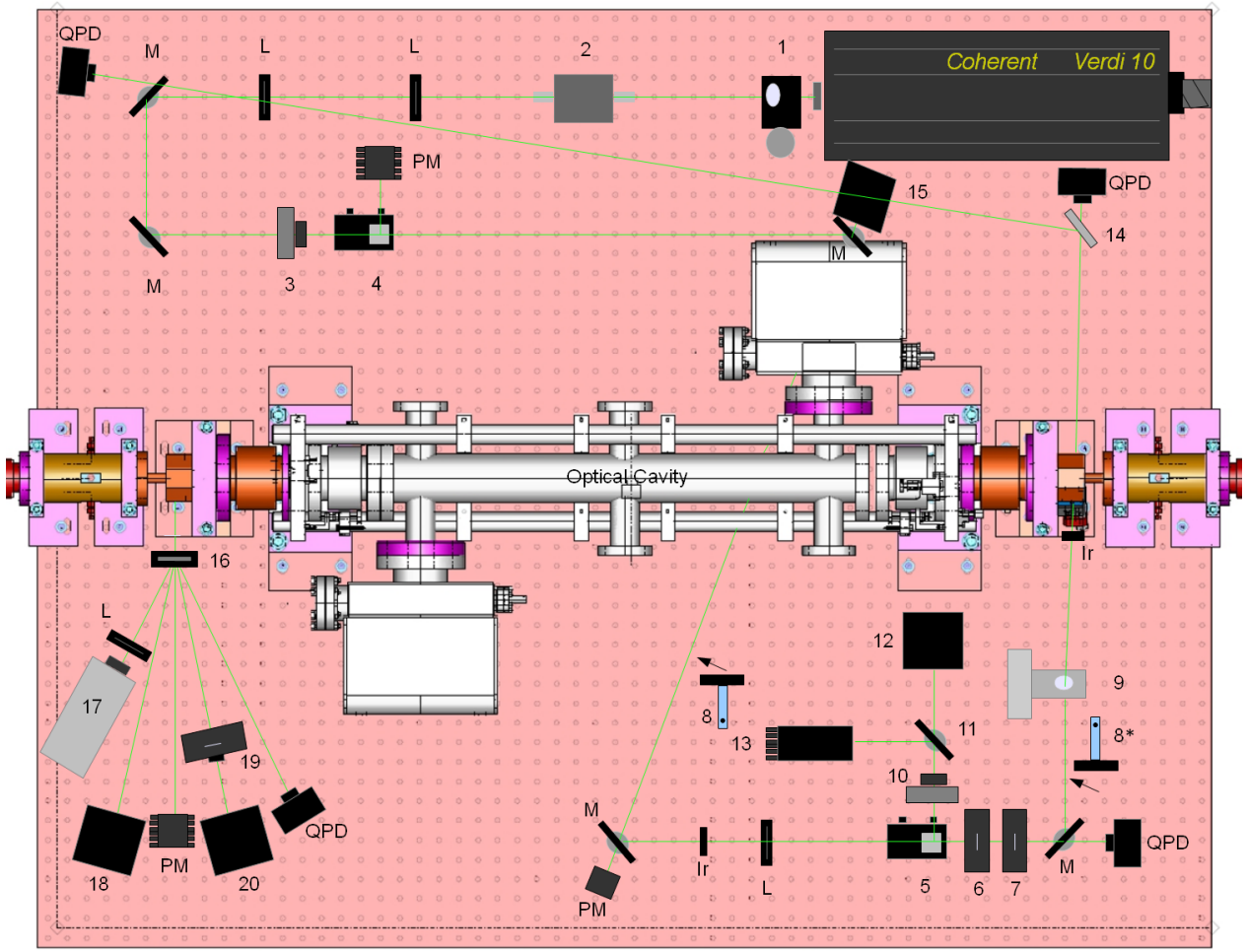

Replacing Hall C system with one similar to Hall A will result in higher powers and better reliability

Other Laser system updates (not HIPPOL)

<u>Locking electronics:</u>

Hall A still using same custom cavity locking electronics from late 90's

→ Locking electronics live upstairs in CH, VME/EPICS interface in hall

→ CH electronics have already been replaced with spare modules

→ VME modules in hall have had component failures in the last few years - repaired by Spectrometer Support

For reliable long term operation, need spares/backup system

→ Hall C used commercial, FPGA-based locking system (Digilock) – may not be fast enough for high gain cavity

→ Tests with Hall A cavity planned

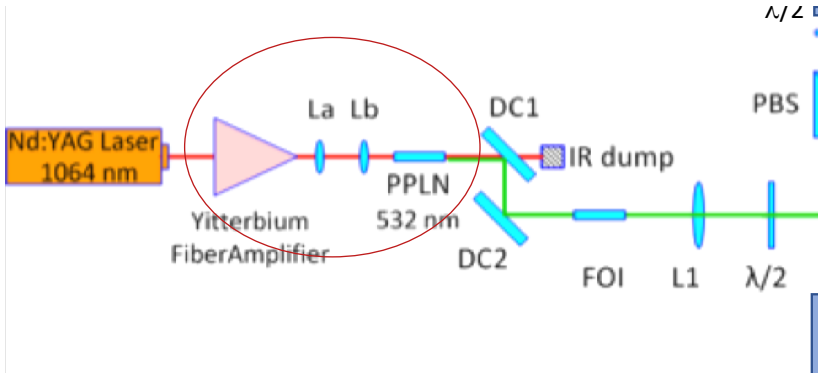

<u>Laser frequency doubling system</u>

→ Existing system uses separate fiber amplifier + PPLN crystal

→ Replacing PPLN crystal requires significant alignment + downtime

→ Combined-function amplifier-doubler will be tested for compatibility with high finesse cavity

Other Laser system updates (not HIPPOL)

<u>Locking electronics:</u>

Hall A still using same custom cavity locking electronics from late 90's

→ Locking electronics live upstairs in CH, VME/EPICS interface in hall

→ CH electronics have already been replaced with spare modules

→ VME modules in hall have had component failures in the last few years - repaired by Spectrometer Support

For reliable long term operation, need spares/backup system

→ Hall C used commercial, FPGA-based locking system (Digilock) – may not be fast enough for high gain cavity

→ Tests with Hall A cavity planned

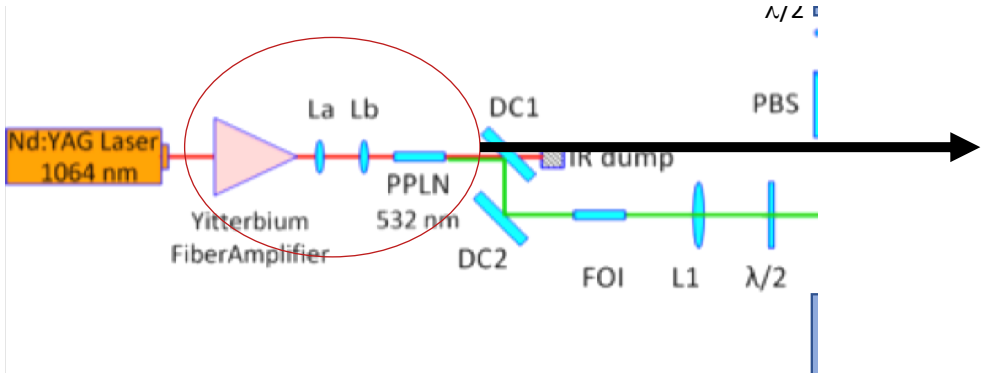

Keopsys CVFA

Compton Electron Detector

Existing electron detectors

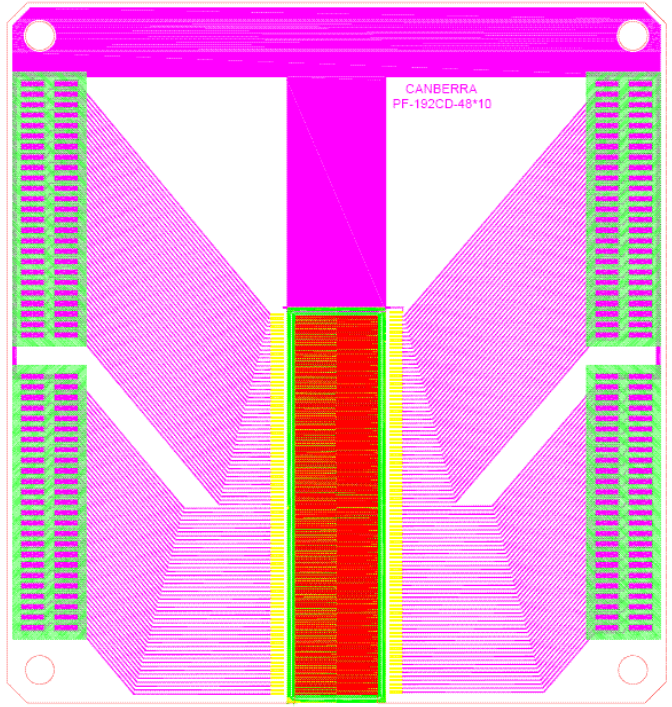

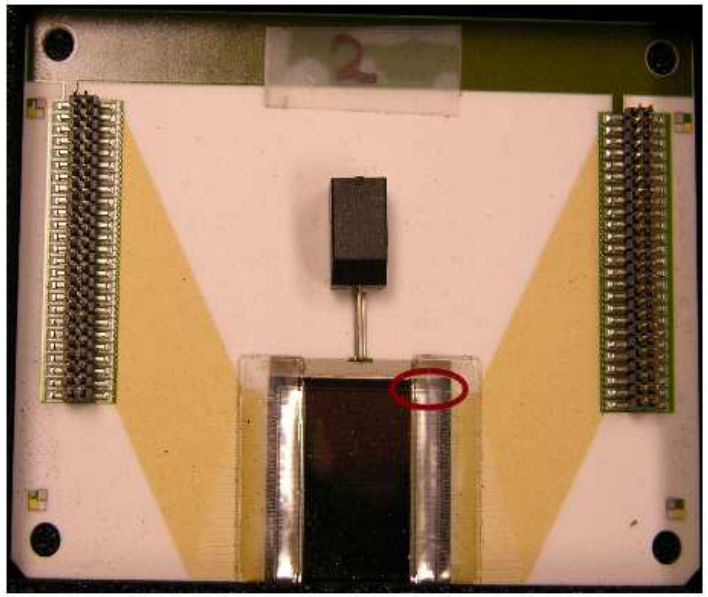

Hall A: silicon strip
→ 4.6 cm vertical coverage
→ 192 strips, 240 μm pitch
→ ***Suffers from small signal size/excess noise leading to low efficiency***

Hall C: diamond strips
→ 2 cm vertical coverage
→ 96 strips, 200 μm pitch
→ ***Undersized for ideal 11 GeV operation***
→ ***Efficiency ok, but could be improved***

Detector Requirements

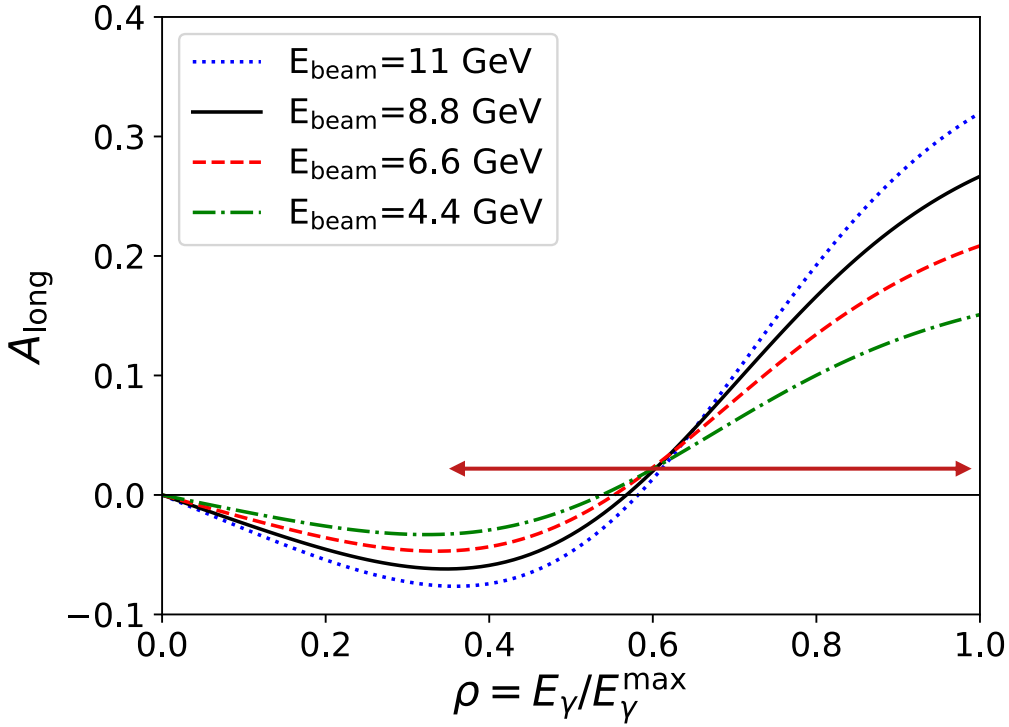

Needs to cover from Compton edge to at least zero crossing, asymmetry minimum preferred

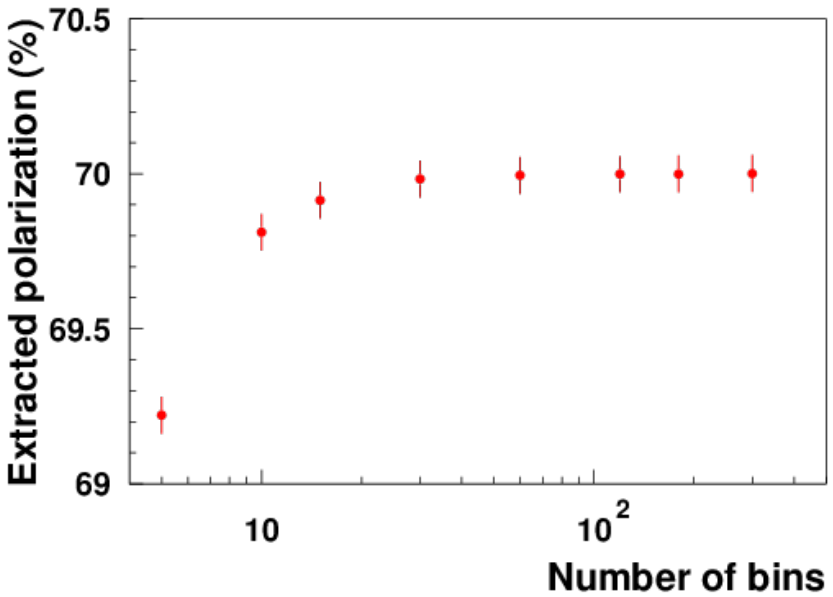

Need ~ 30 bins/strips between endpoint and zero-crossing to reliably extract polarization

A pitch of 245 μm will allow good performance down to 4.4 GeV in both Hall A and C

Hall A → 5.75 cm
Hall C → > 2 cm

2 x 3 cm or 6 cm plane for Hall A
3 cm plane for Hall C

Electron Detector

HIPPOL project:

→ Replace existing electron detectors in Halls A and C with new diamond strip detectors

→ Optimize size and granularity for operation at 11 GeV while retaining low energy capabilities (perhaps slightly reduced precision at lowest energy)

→ Improve on Hall C design with different approach to electronics – amplify signal on detector plane (rather than outside vacuum can)

In parallel, U. Manitoba developing HVMAPS-based detector system (Hall A A only)

→ Prototyping and testing underway

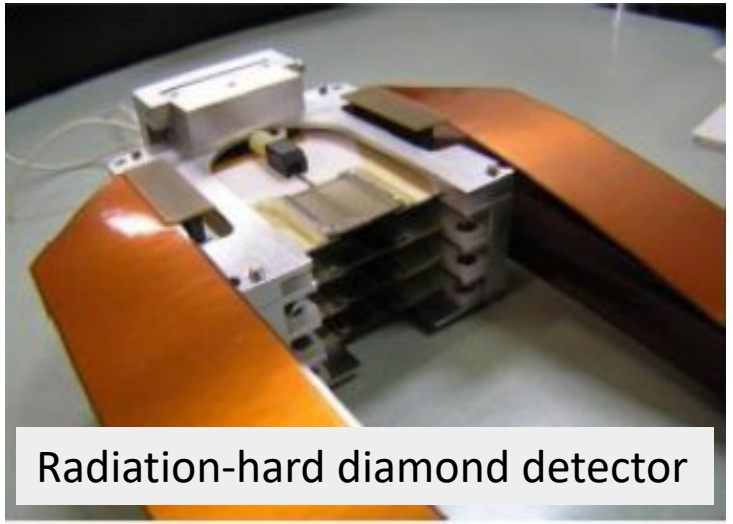

Radiation-hard diamond detector

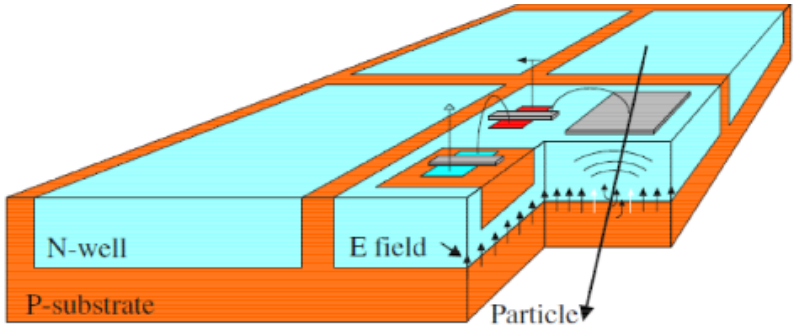

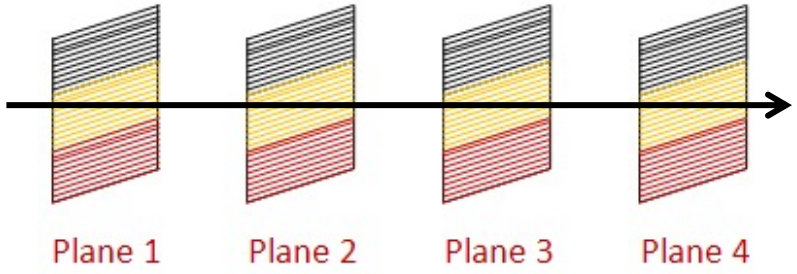

Diamond electronics and test planes

- Hall C diamond detector worked for Q-Weak but suffered from non-uniform, modest efficiency
  - Analogue pulses carried out of vacuum via flex cables
  - QWAD amplifier-discriminators just outside vacuum can
  - Would like signal amplification on the detector board
- Several ASIC solutions under investigation (Jim Fast w/Fast Electronics)
  - Early candidate: VAC32 from IDEAS → not terribly radiation hard
  - SAMPA (ALICE) → amplification, ADC, digital processing
  - SALT (LHCb) → Fully digitizes signal and provides serial output. Operates at 40 MHz → would not sample all beam bunches with the same efficiency
  - Calypso (Ohio State) → LVDS output w/time over threshold, rad hard (200 Mrad or more)

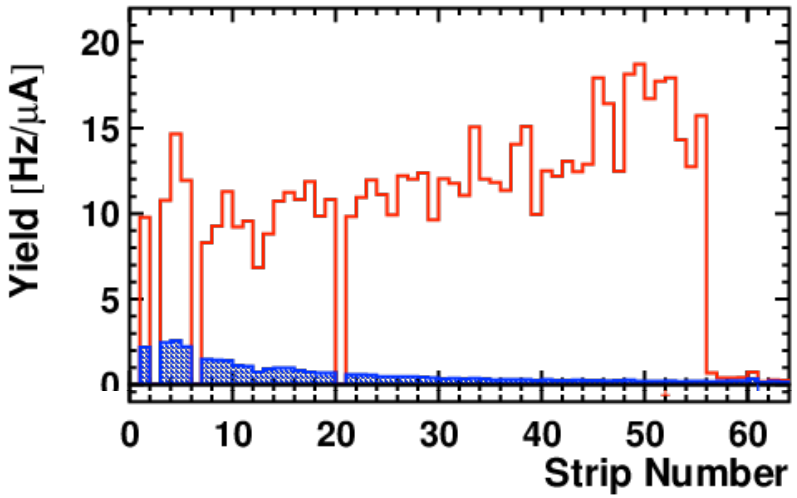

Test planes will be fabricated by Ohio State

→ Diamond from II-VI in hand (1x1 and 1x3 substrates)

→ OSU will provide plane with Calypso chip → ATLAS test board

→ SALT/SAMPA test planes – William Gu working on test board design. OSU will attach chips and sensors

Electron Detector DAQ

Electron detector readout requires processing “tracks” from multiple planes at high rates (order 100s of kHz)

- Hall A has transitioned to using the JLab VETROC modules (first use with beam during CREX)
- Hall C was using CAEN V1495 during Q-Weak
  - V1495 worked well, but can only handle full tracks at very limited rates
  - Required complicated pseudo-tracking based trigger with operation in scaler mode
- Hall C also moving to VETROC–based readout
  - Standardization across Hall A and C
  - Higher rate capabilities – more flexibility

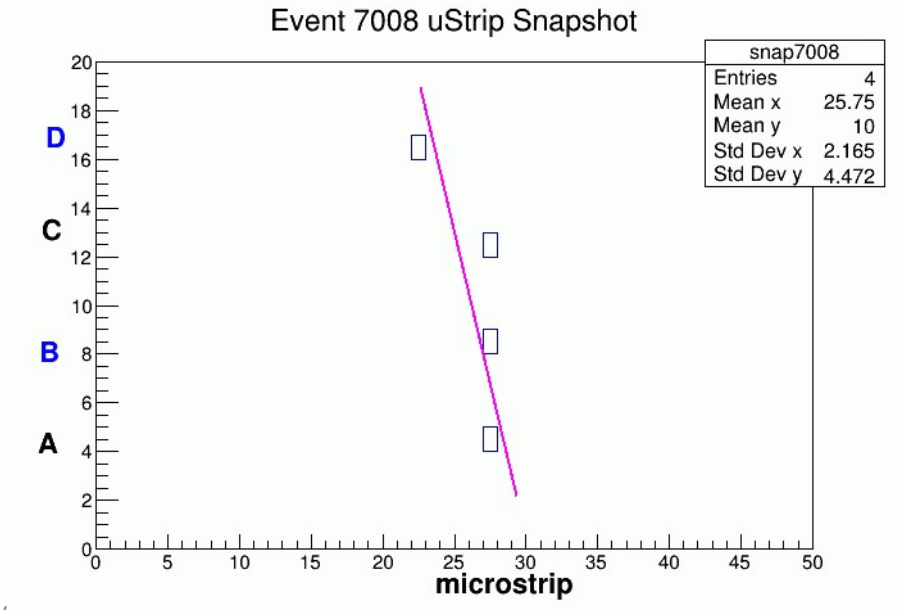

VETROC

PCB drawing

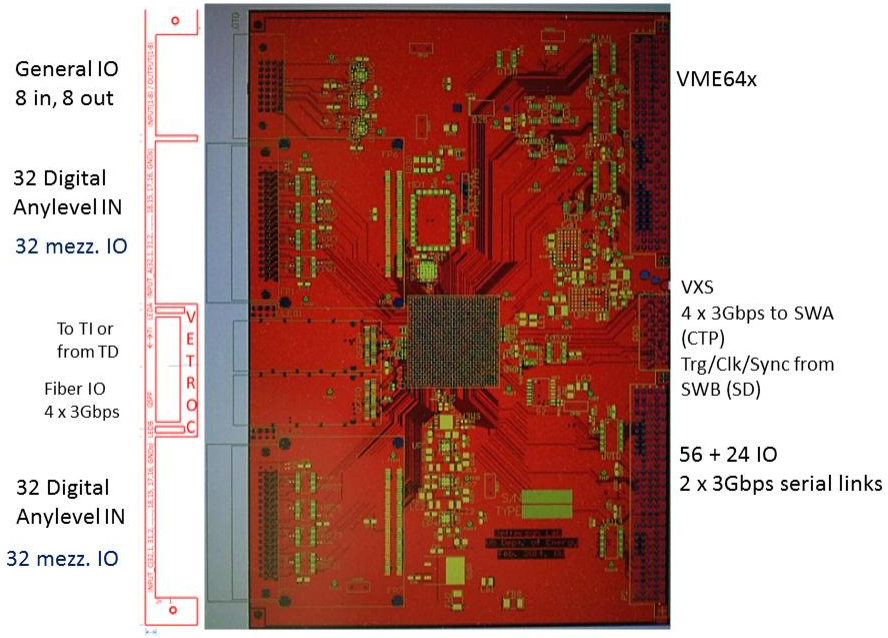

Tracking Detectors for Hall A Møller

Existing Hall A Møller detector system has only coarse information on event distribution at detectors
→ Event distribution can provide information about spectrometer optics → check Monte Carlo (analyzing power)
→ Additional tracking detector would help reduce systematic error due to acceptance/optics
→ Studies underway to see how tracking detector could help studies of radiative effects and Levchuk effect correction

GEMs will be used to provide this tracking information
→ Funded through MOLLER NSF midscale project (detectors) and DOE project (mechanical supports)

Detectors still in design stage
→ Assessing installation locations, mechanical conflicts, desired segmentation
→ Desirable to install early to allow use/checkout prior to MOLLER run

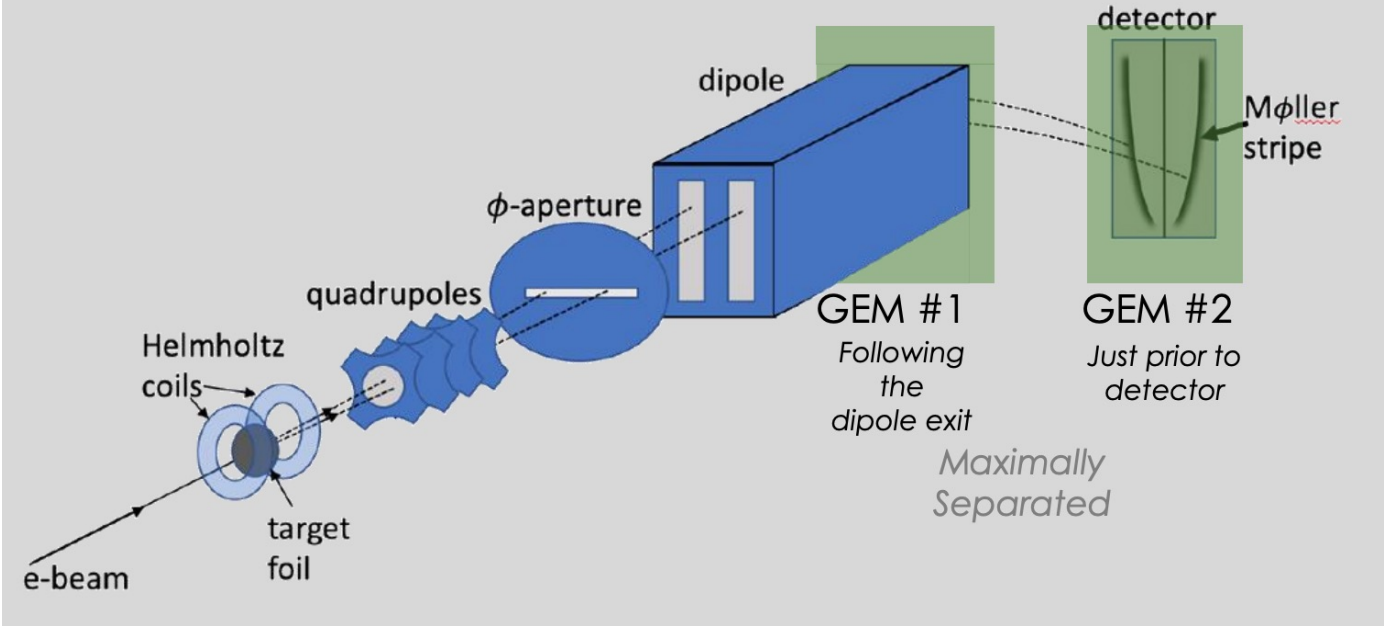

Hall C Møller Polarimeter Target Magnet

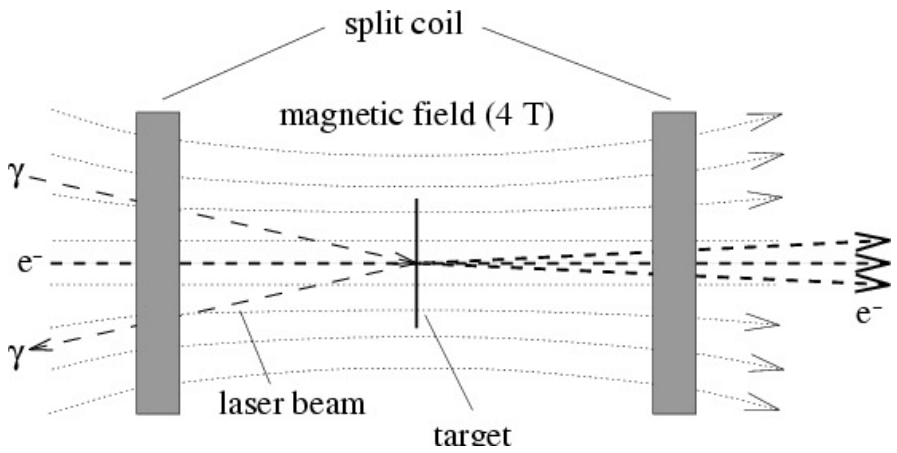

Hall C first to implement use of high field magnet with pure iron foil in Møller polarimeter

→ Iron driven to magnetic saturation (out of plane) with large, 4 T magnetic field

→ Magnetic properties of iron well known, resulting in small systematic uncertainty (~ 0.3%) due target polarization

→ Previously, in-plane polarized foils in low field magnet resulted in 2-3% uncertainties

Drawback: Need to use superconducting magnet! Operation relies on ESR

→ In 12 GeV era, operation sometimes limited due to capacity

→ Small perturbations knock magnet offline

Hall C Møller Polarimeter Target Magnet

Several years ago, Hall A transitioned to high-field target magnet

→ Existing cryo system in hall made connecting cryogenically cooled magnet directly to ESR problematic (used buffer dewar with batch fill)

→ Cryogen-free magnet (pulse-tube cryocooler) was a cost effective solution – deployed in Hall A since 2016 (DVCS/GMp)

→ After several years of successful operation, a nearly identical magnet was obtained for Hall C

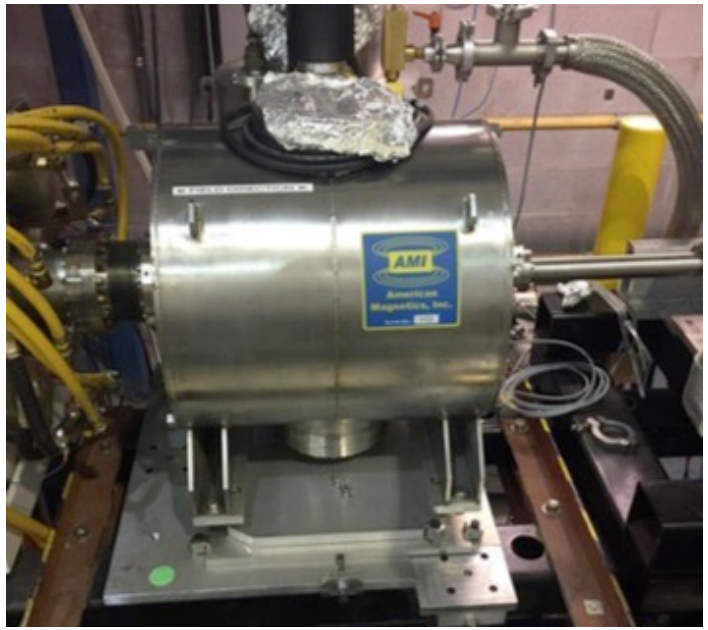

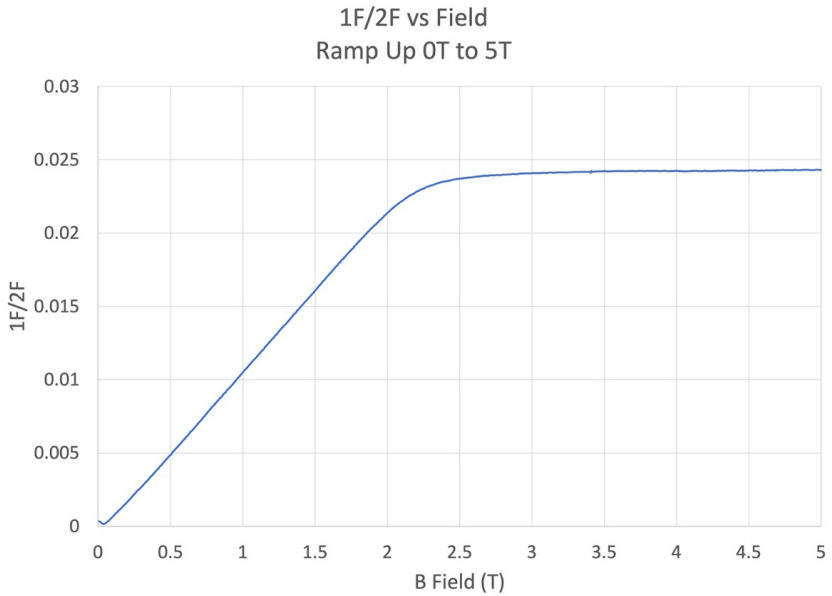

Hall C AMI magnet delivered in early 2020

→ Staged in ESB for initial testing

→ Has subsequently been used been used for Kerr measurements/test of target foil saturation

Hall C Møller Polarimeter Target Magnet Installation

New magnet not a drop-in replacement for old system
→ New stand required
→ New upstream spool piece to allow viewing the target
→ New target ladder/motion system also needed (same design can also be deployed in Hall A)

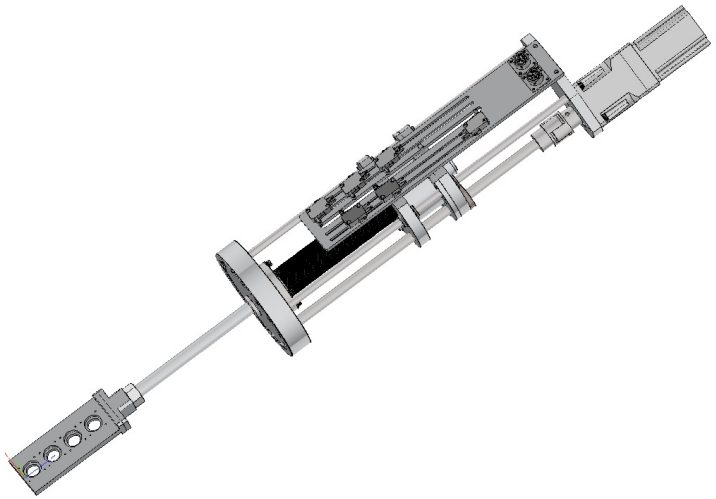

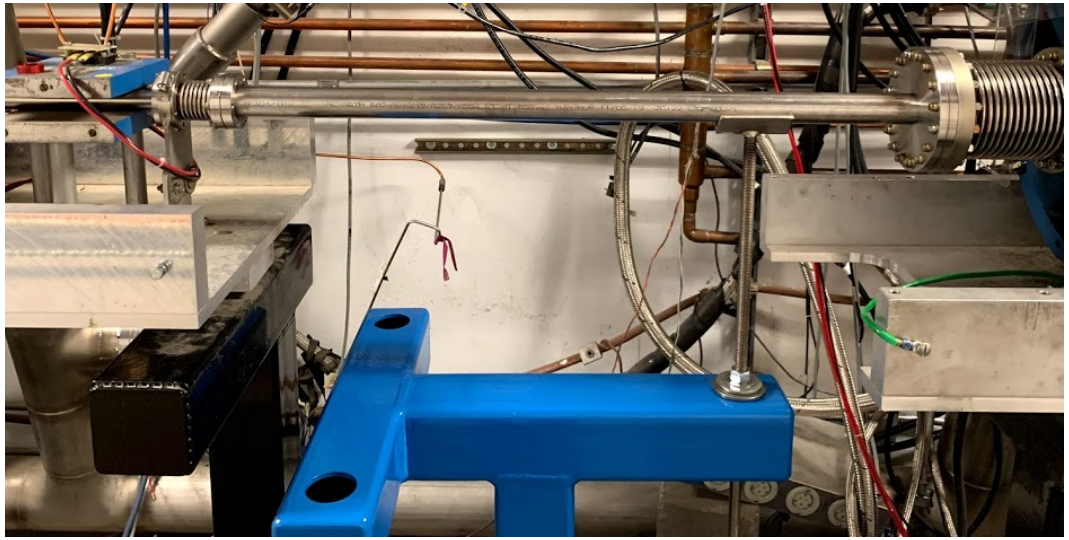

Old system completely removed during this SAD
→ Disconnected from hall cryo
→ Magnet packed up and stored
→ New stand installed
→ Spool piece installed in beamline until magnet installation

New magnet will be installed during early 2022 SAD
→ Mapping this fall

Summary

- Several ongoing/planned improvements to Hall A and C polarimeters
- HIPPOL capital project
  - Hall C Compton laser
  - Hall C electron detector DAQ
  - Hall A and C electron detectors
- Hall A Møller → new tracking detectors to better constrain analyzing power and corrections
- New target magnet for Hall C Møller → no reliance on ESR, more stable operation