High-Luminosity upgrade(s) of CLAS12: Status and Perspectives

Rafayel Paremuzyan : Jefferson Lab

CLAS12 Run Group H Workshop

13,14 Nov 2026

Outline

- Why increase the luminosity by x2
- Current status
- Beyond x2 Luminosity
  - μCLAS12
  - Mini - μCLAS12
  - Various configurations

Why increase Luminosity?

The design luminosity of CLAS12 is **10^{35}cm^{-2}s^{-1}**, corresponds to **75 nA on Hydrogen target**.

- CLAS12 initially reached 75% of the standard luminosity
- Most of approved experiments assumed 100% tracking efficiency, and not very realistic geometric acceptance of CLAS12.
- Tracking efficiency of the initial reconstruction software was not as high as it is now
  - Analysis with low cross-sections and multiple charged tracks suffered much more
- Increasing the luminosity by factor of 2 will help to recover desired statistics
- A New tracking detector in front of DC R1 will reduce efficiency loss at high beam currents

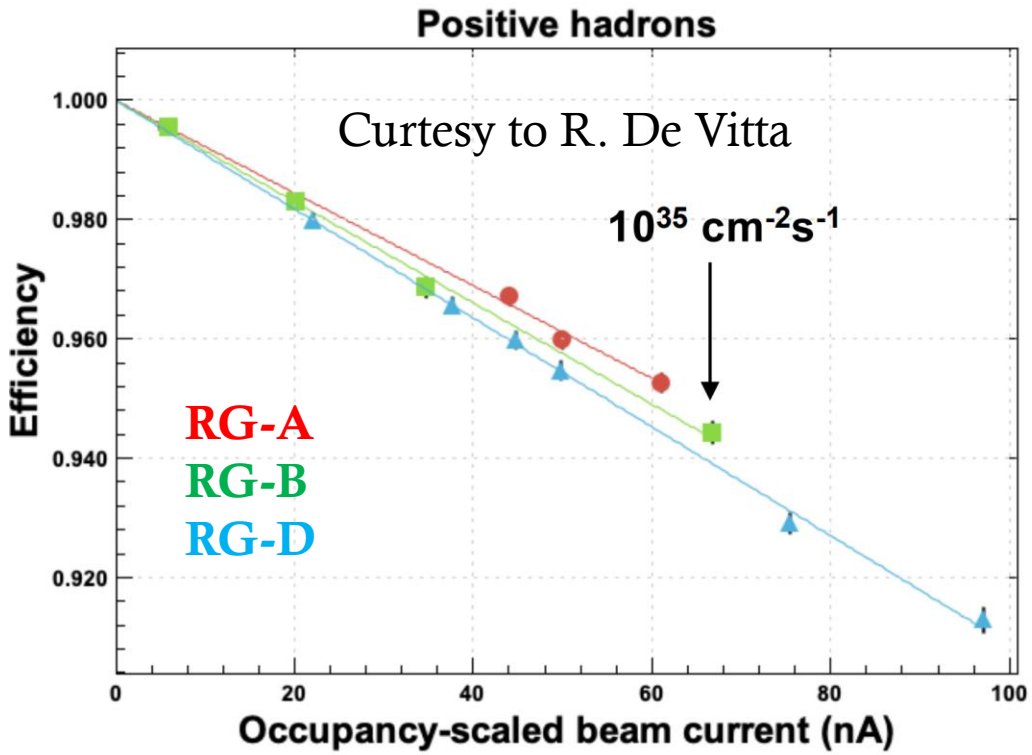

New tracking detector

- Install a new tracking detector in front of DC R1 to help recovering lost hits in DC

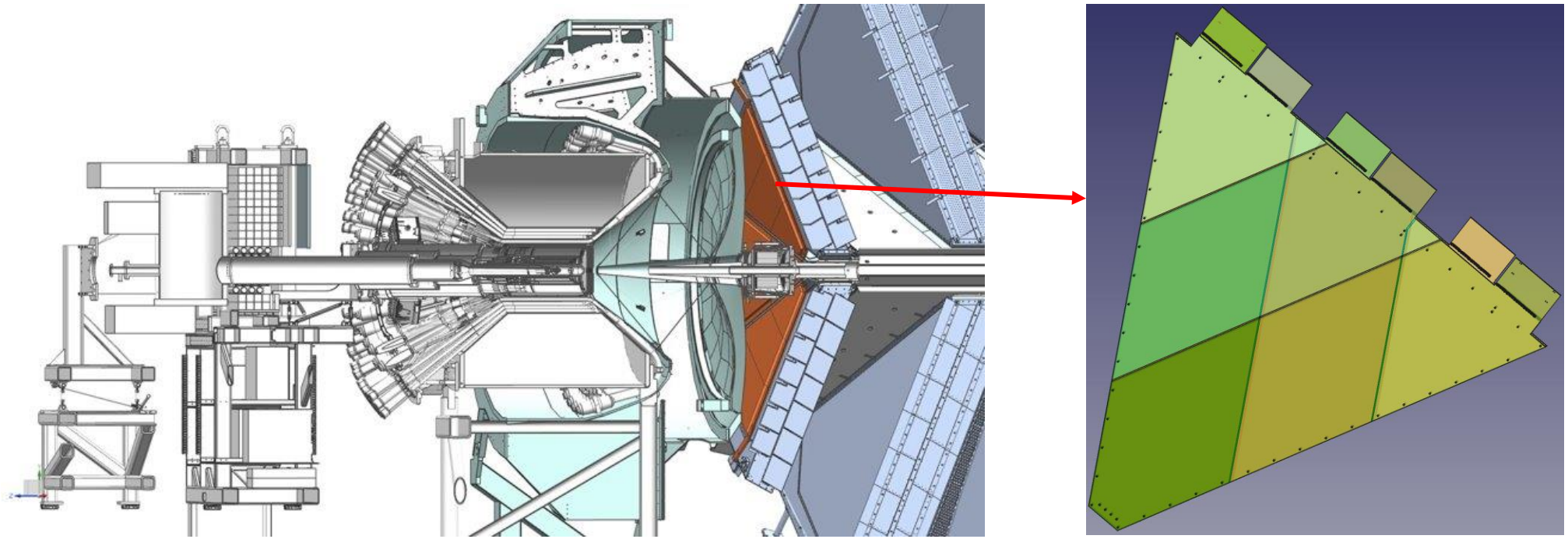

- Relatively recently developed μRWell detectors are promising option
  - Low material budget
  - Easier to assemble (compared to GEMs)
  - Good gain demonstrated for small-size detectors (typically 10 x 10)
  - With no large detectors available, CLAS12 built a large-scale prototype with UVA and CERN.

The 1st prototype detector

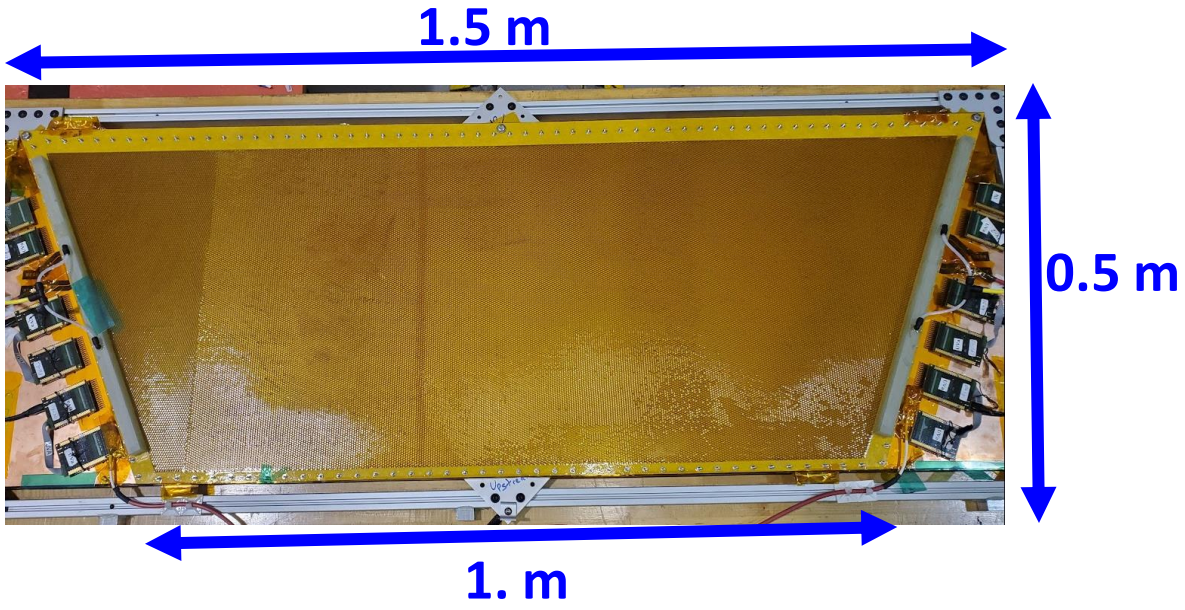

- Trapezoidal shape to match DC acceptance at large angles.
- Three capacitive sharing layers
- Strip pitch 1 mm
- 2D readout: called U and V
  - Charge is shared between U and V alayers.
- Strip orientations wrt trapezoid base +/- 10 deg
- 704 U and 704 V strips
- Readout through SRS APV 25 hybrids.

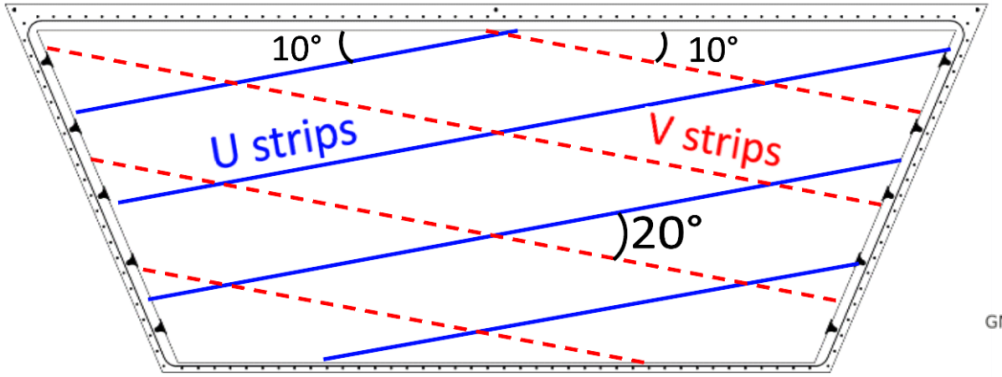

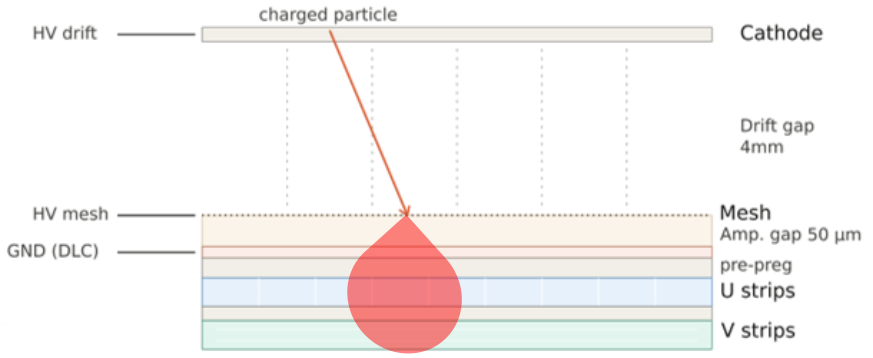

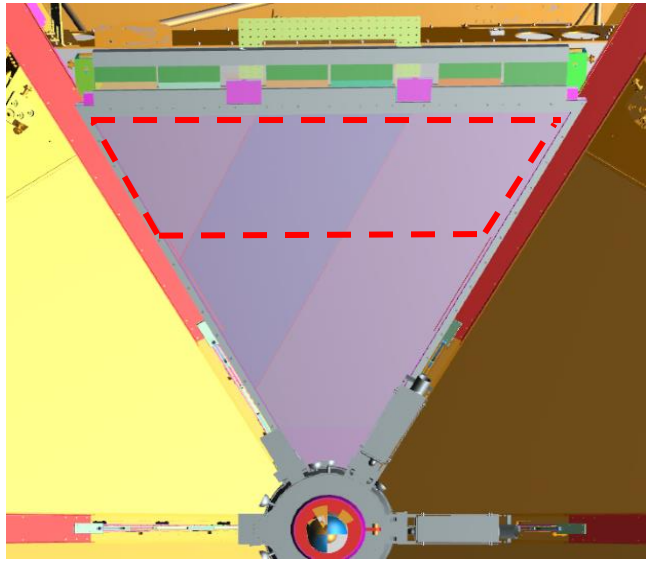

Rough start with first prototype

- Detector arrived with several HV sections not working + one half Drawing resistive like current.
- After some initial tests **sent back to CERN for repair**.
- CERN fixed **most of issues**, and when it arrived, we proceeded to characterizing the detector
- Not long after **Cathode HV connections getting lost** one after another.
  - Solution was to replace Aluminized Mylar with a **Copper plated Kapton**. No issues since then.

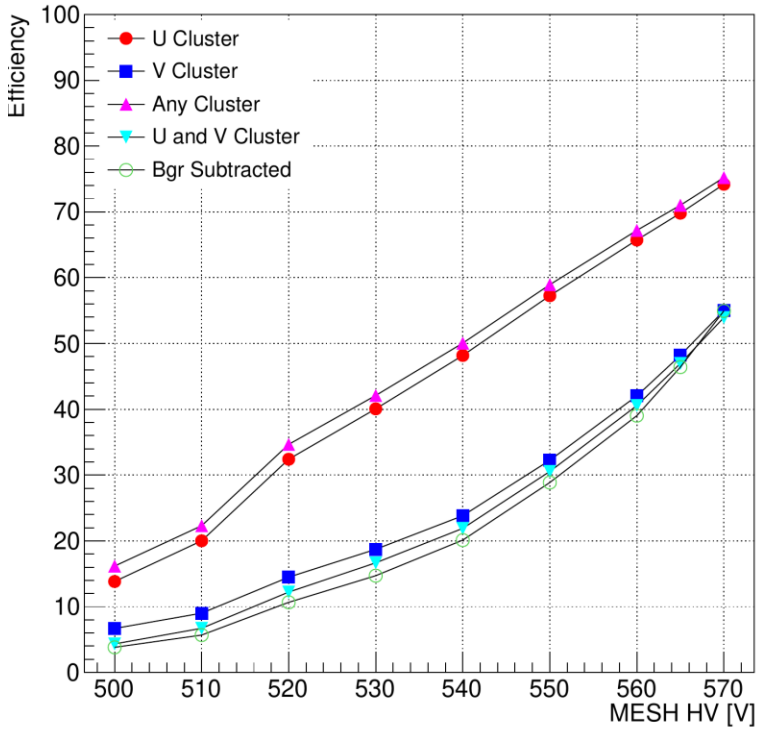

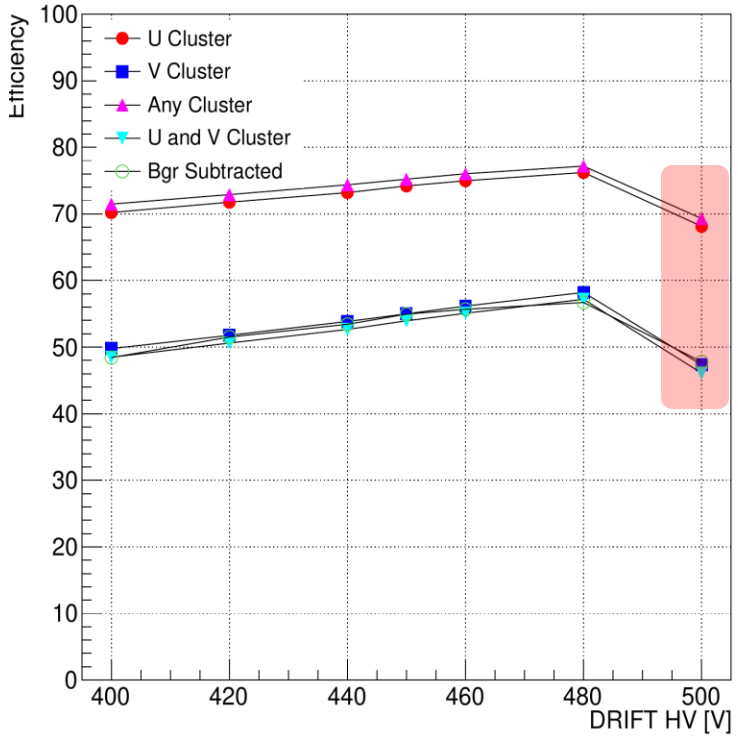

Cathode connections

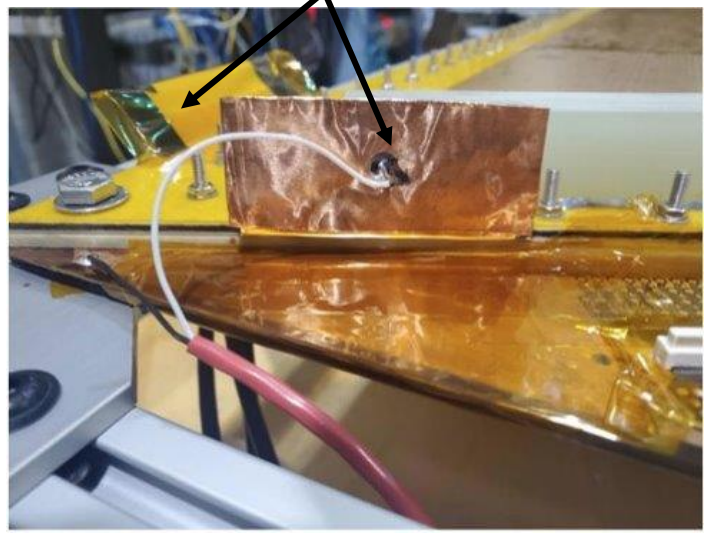

Summary of the first prototype

GAS: Ar/CO_2, 80/20

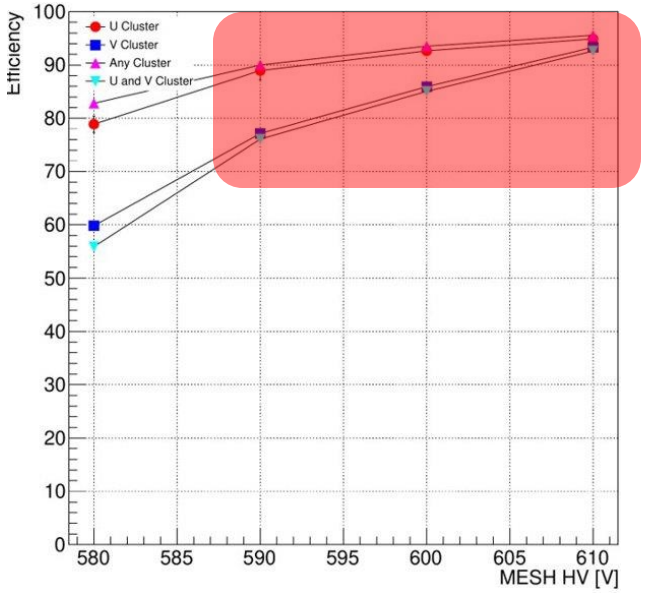

Instable above 580 V

GAS: Ar/Isobutane 90/10

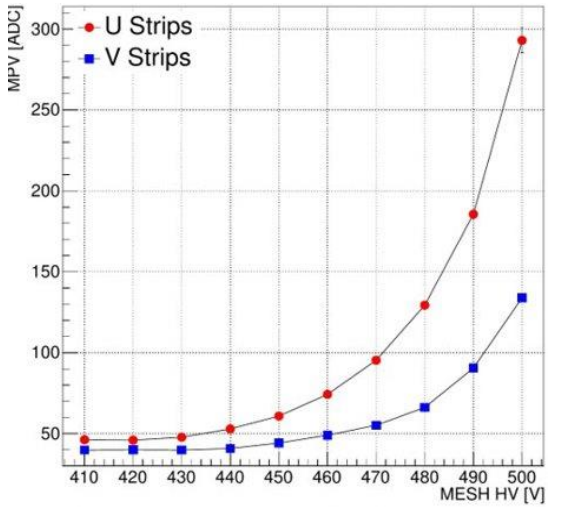

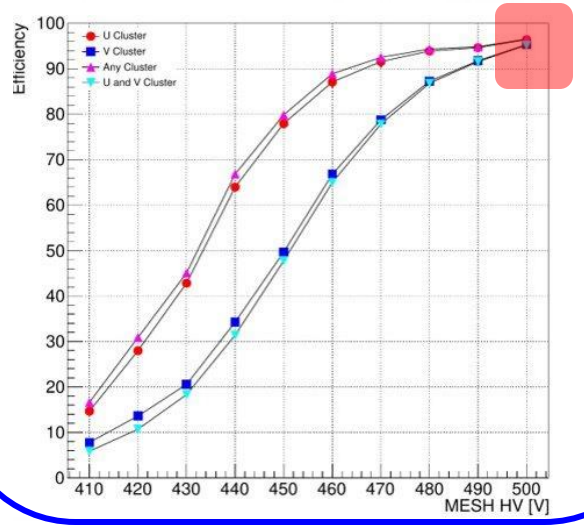

- Ar(80)/CO_2(20) : reached above 90% efficiency however detector is very unstable above 580 V.
- Ar(90)/Isobutane(10) reaches 90%+ efficiency easier, however no headroom, at 500V detector also start drawing current.
- Neither gas demonstrated a "Stable plateau"
- Charge sharing between layers **did not provide sufficient gain** for large detector!

Next prototype: two 1D detectors instead of 2D detector.

Performance of the 2nd prototype

Separate amplifications for U and V

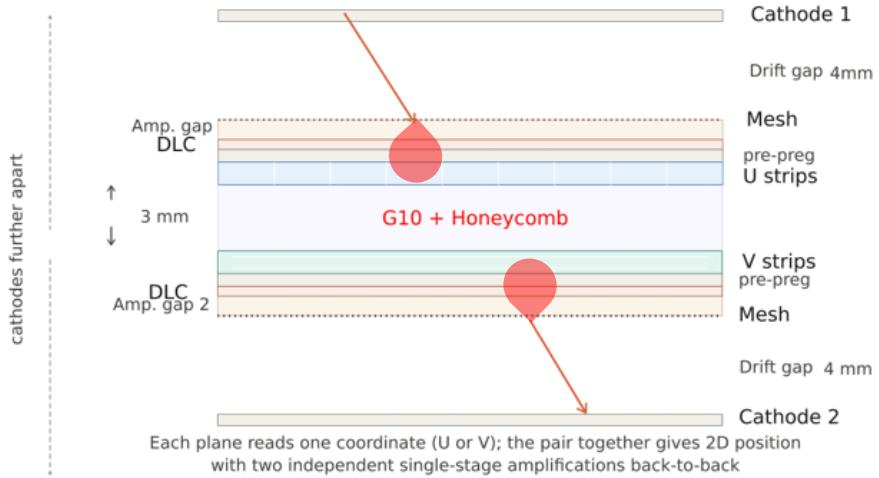

Ar/Isobutane 90/10

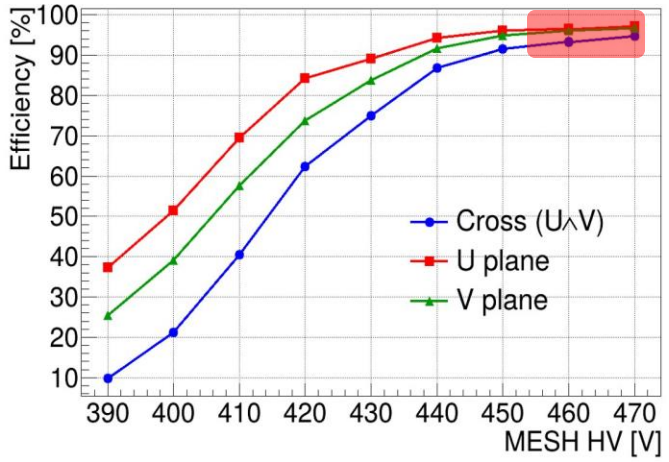

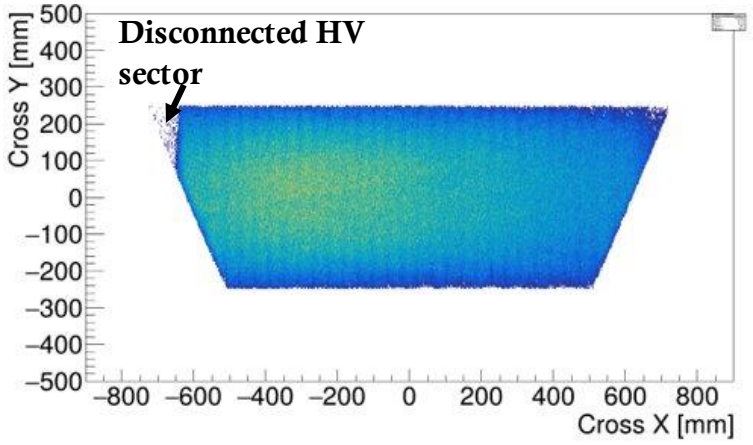

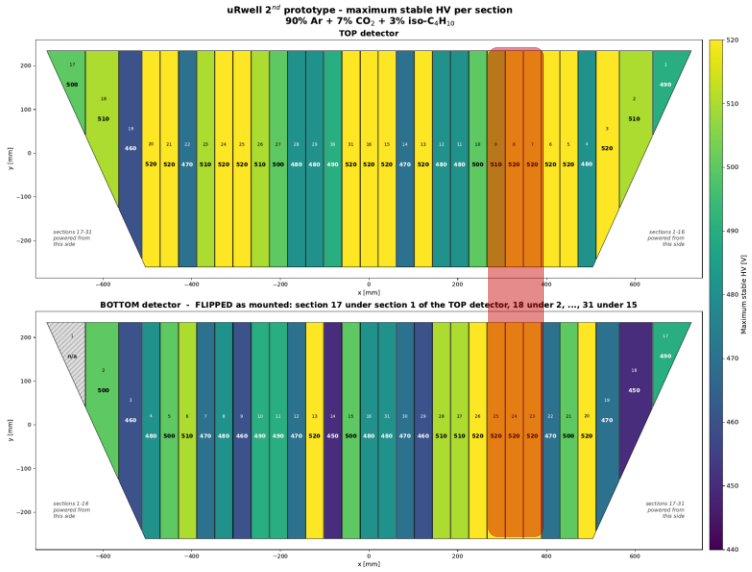

- Higher gain
- However, instabilities started at lower HV 460 V vs 500 V.
- Testing HV stability for each section separately showed **large variation among HV sections**.
- Connecting only **three "Same" HV sections** in Top and Bottom detectors shows **No instabilities 30 V from the beginning of plateau**.
- These discussed with CERN MPT group – variation is likely due to **non-uniform copper plating**.
- Next detector will use **selective plating**.

Next steps

- All these tests were done with **SRS APV25** FE cards.
  - **Incompatible with CLAS12 RO** because of low latency
- Final detectors will use JLab developed boards with **VMM3 asics** (lead by Ben Raydo)
- First batch of boards expected to arrive **next 1-2 weeks**
- Take Cosmic data with new VMM3 boards early Jan 2027
- If all works well, Move **detector to the Hall** behind the ECal Sector 1.

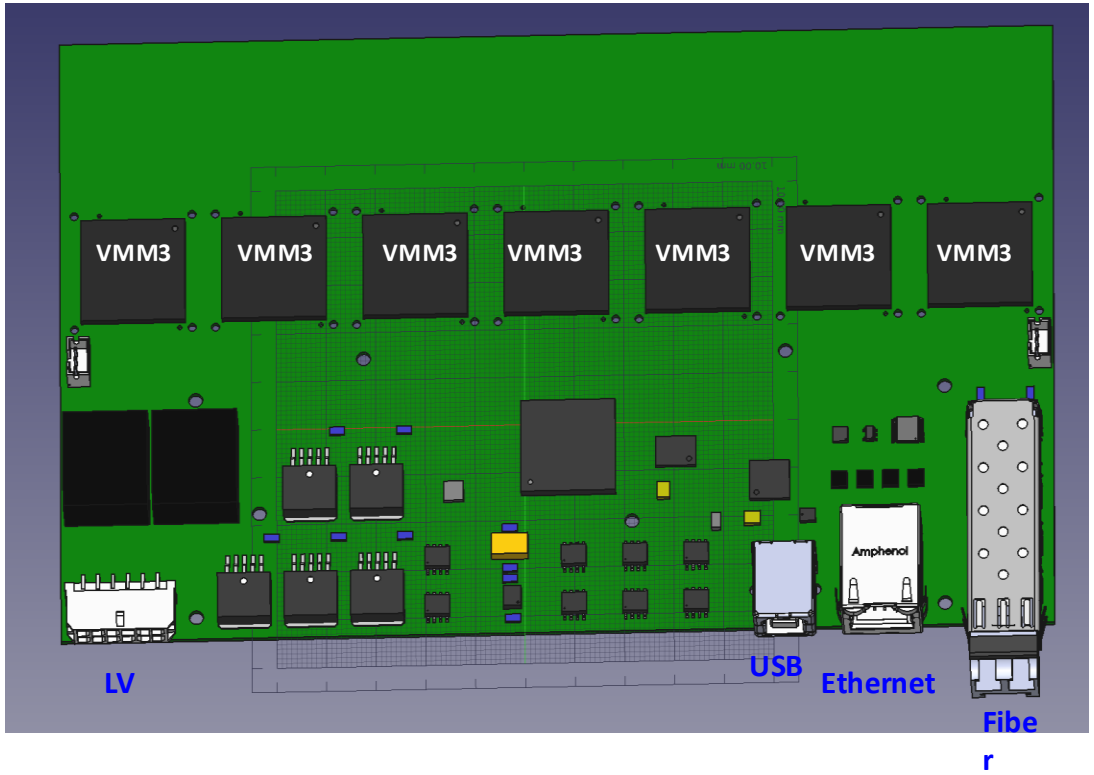

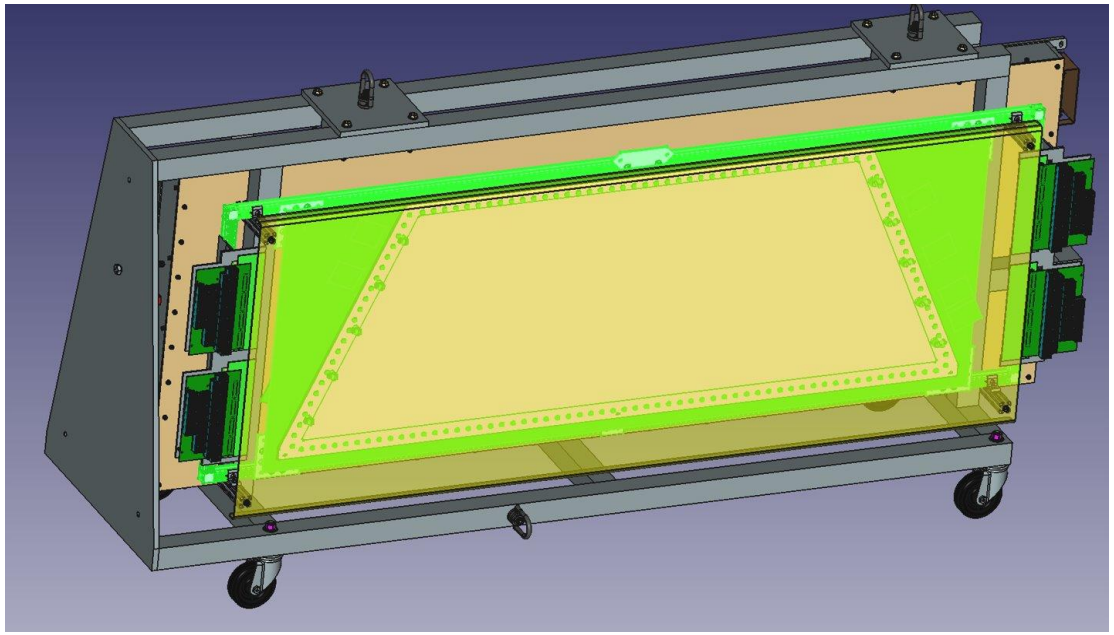

- This will be first "beam" test of this detector
- Check if there is a rate depend degradation of the performance (gain, stability, etc)

Next detector (prototype/production)

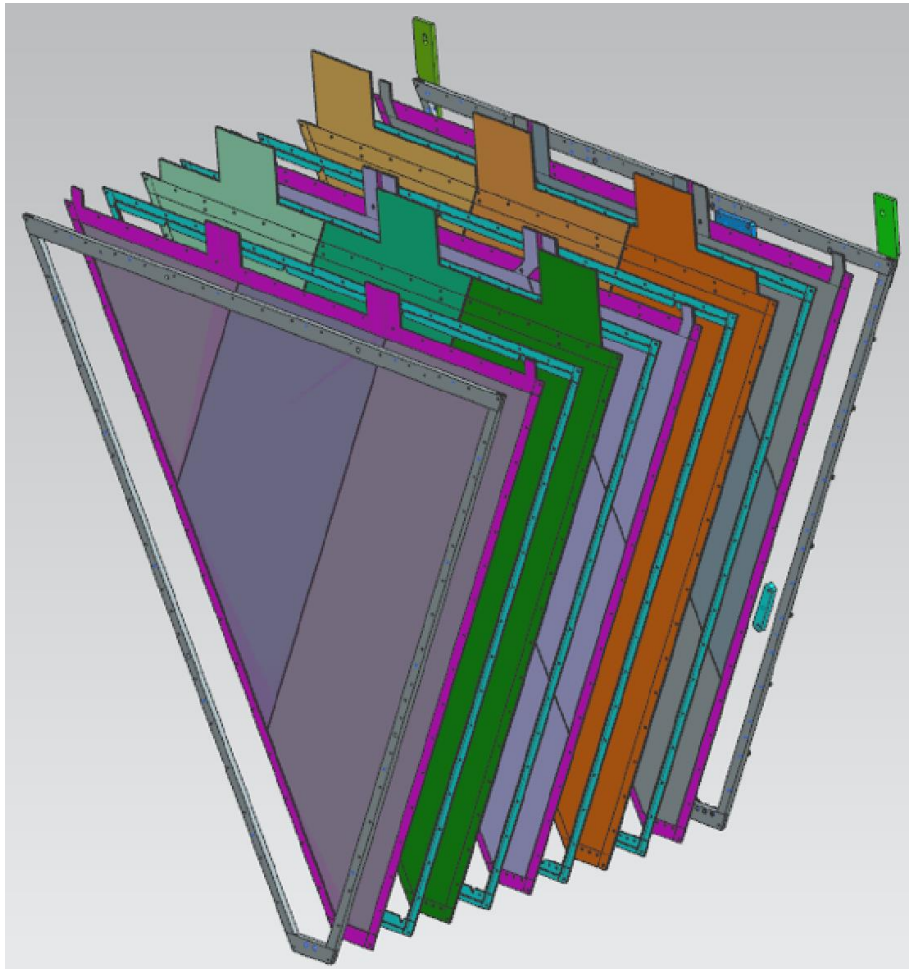

- Design of the next (full size) detector is almost finalized. Final details being worked out.
- 2 detectors/sector = 4 layers: ABBA
- Each layer has 3 Sections with ~4mm gap in between
- Single layer is readout with 3 RO boards
- Strips are parallel to sides : ∓27.15° stereo orientation.

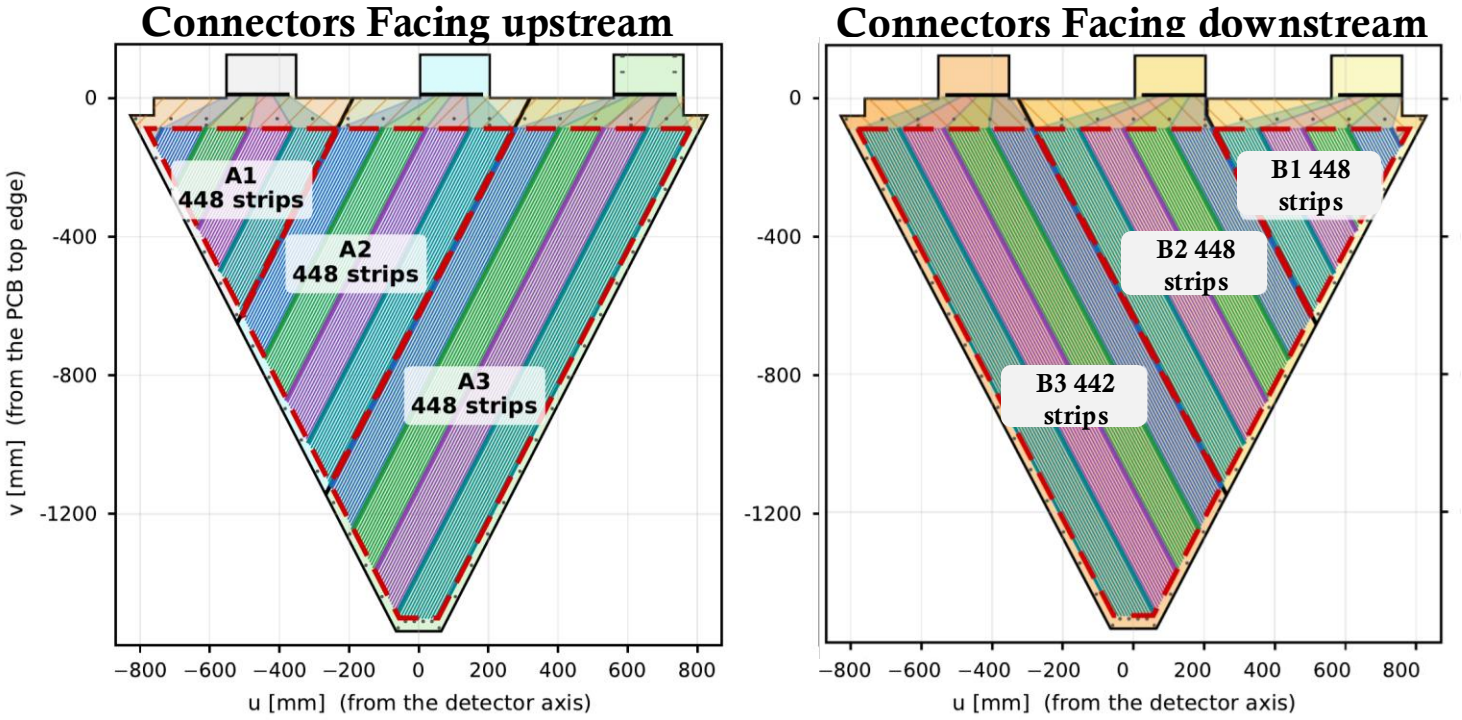

μCLAS12

- PR12-25-001 approved by PAC53 include 3 processes: DDVCS, TCS, J/ψ electro-production near threshold
- Required Luminosity $\mathbf{10^{37}cm^{-2}s^{-1}}$. **7.5 μA** beam on 5cm $\mathbf{LH_2}$.
- Requires **muon detection**.
- Almost no detector will survive x100 luminosity increase.

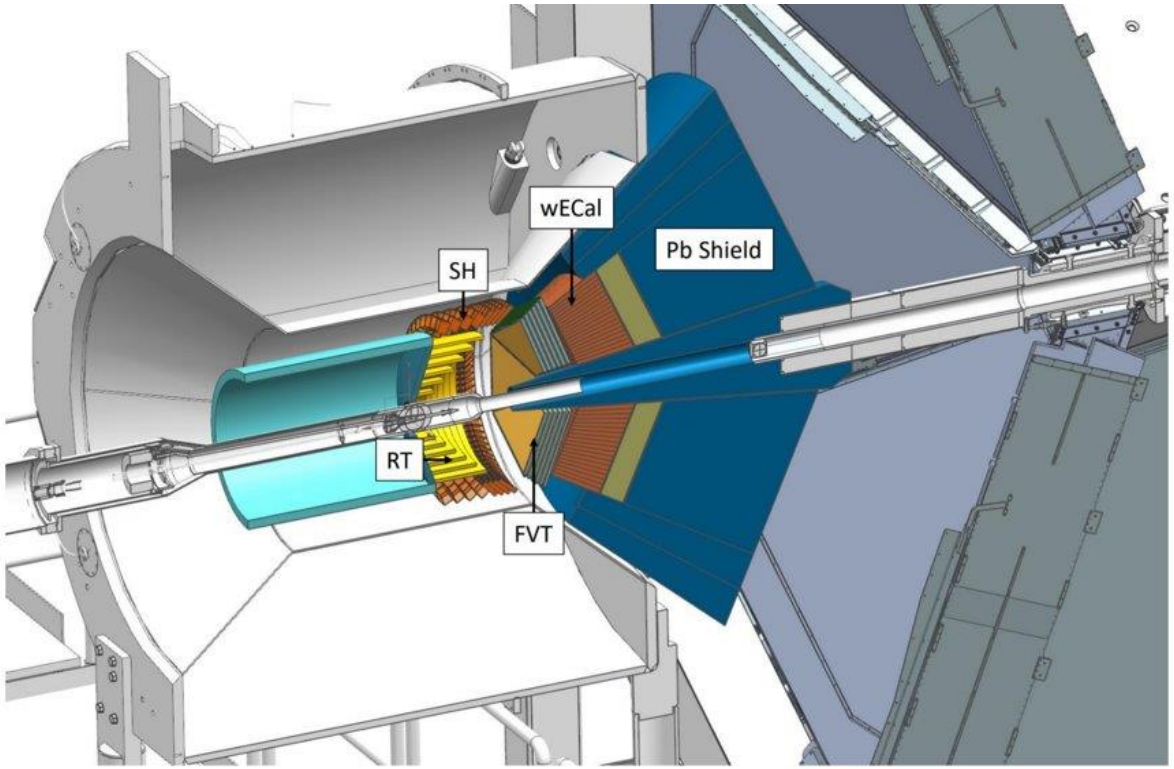

Planned changes

Removed: HTCC, FT, SVT/MVT, CTOF, CND, BAND, LTCC
Kept: DC, FTOF, PCal/ECal → muon spectrometer

Möller cone
thick lead cone (steel jacket) up to 7°

wECal
1320 $PbWO_4$ crystals, 7°–30°, APD readout

Pb shield
60 cm, 7°–35°, 2π: absorbs EM background

FVT
6 triple-GEM stations at ≈ 40 cm: vertexing

Recoil detector
6-layer μRWELL + 540-tile hodoscope, 40°–70°

Rates and trigger at full luminosity

DC

Max. occupancy ≈ 6 / 4 / 11 % (Regions 1/2/3); CLAS12 has run near 10%

FVT

6 GEM layers at 40 cm, VMM3 readout; < 1 MHz/cm^2 max., < 500 kHz/cm^2 average

wECal

1320 $PbWO_4$ crystals, APD readout; < 2 MHz per crystal (HPS: ≈ 1.5 MHz)

Recoil tracker

6 cylindrical μRWELL layers, R = 8–23.5 cm, 40°–70°; < 250 kHz/cm^2

Hodoscope

540 scintillator tiles, 2×2 and 4×4 cm^2; < 200 kHz per tile

Trigger

Single MIP: ≈ 21 kHz; Current CLAS12 DAQ handles 30 KHz

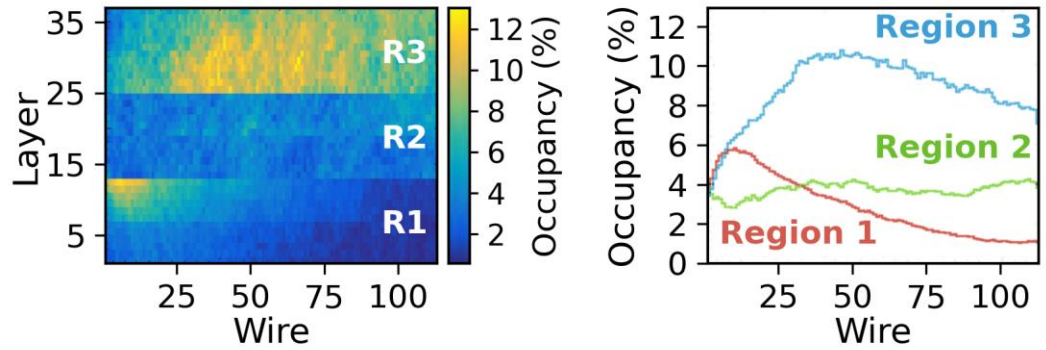

DC occupancy at 10^{37} cm^{-2}s^{-1}, 60 cm Pb shield

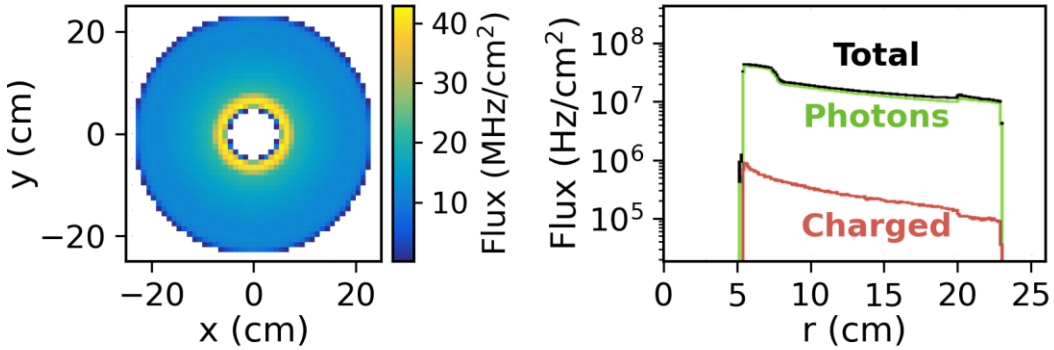

Upgrade path to $10^{37}cm^{-2}s^{-1}$ Luminosity

Stage I
7° Møller cone, no Forward Tagger
up to 5 x10^{35} $cm^{-2}s^{-1}$

Stage II
wECal + Pb shield, 7°–15°,no HTCC
up to 10^{36} $cm^{-2}s^{-1}$

Stage III = µCLAS12
full FD shield and wCal
10^{37} $cm^{-2}s^{-1}$

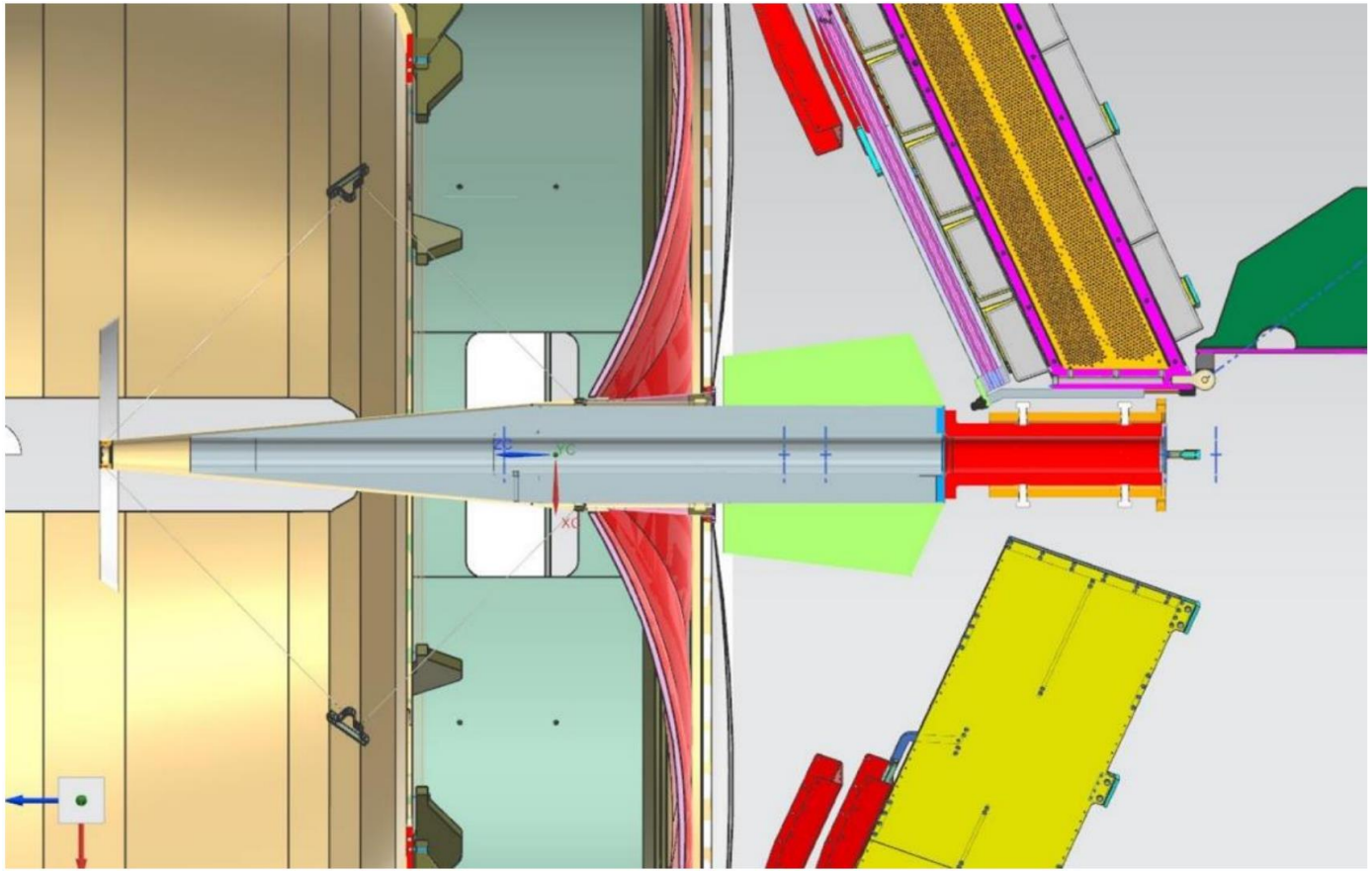

Configuration

- Large Møller cone, as used for RG-C, with extension to 7°
- Forward Tagger removed
- Luminosity up to 5 x10^{35} $cm^{-2}s^{-1}$ (×5 design)

Required upgrades

- Replace the MicroMegas of the CVT
- New forward vertex tracker (FVT)
- Better shielding downstream of the torus for DC Region 3

Physics

- Most exclusive and semi-inclusive reactions at high Q^2

R. De Vita's slide from the High Lumi workshop

Upgrade path to $10^{37}cm^{-2}s^{-1}$ Luminosity

Stage I
7° Møller cone, no Forward Tagger
up to 5 x10^{35} $cm^{-2}s^{-1}$

Stage II
wECal + Pb shield, 7°–15°,no HTCC
up to 10^{36} $cm^{-2}s^{-1}$

Stage III = µCLAS12
full FD shield and wCal
10^{37} $cm^{-2}s^{-1}$

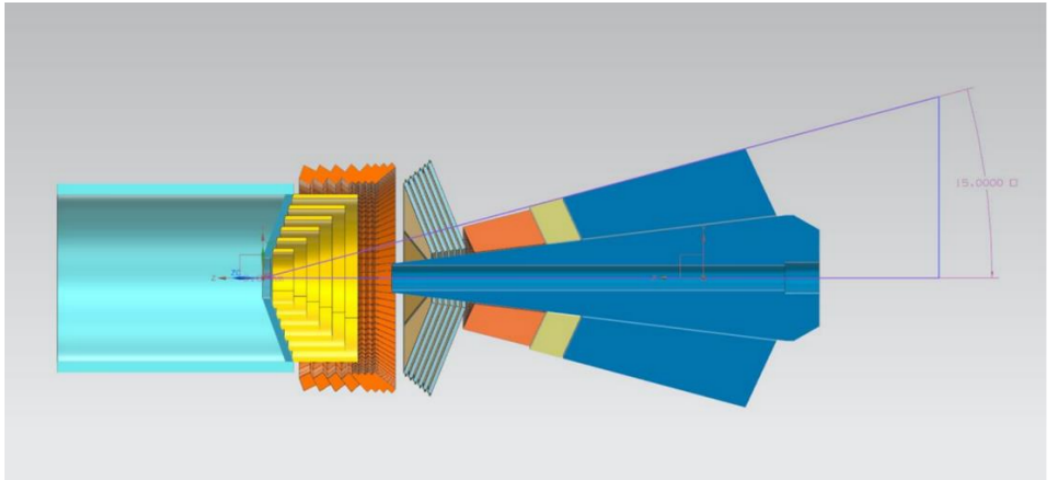

Stage II layout: wECal and Pb shield from 7° to 15°

Simulation studies

- Luminosity up to 10^{36} $cm^{-2}s^{-1}$, based on estimated background levels
- First estimates for J/ψ production on neutron

Configuration

- wECal + Pb shield from the 7° Møller cone to 15°
- HTCC removed

Physics

- CLAS12 program, limited to high-rate kinematics
- J/ψ quasi-real photoproduction tagging the recoil nucleon
- Deuteron target: separate bound neutron and proton
- Possible first DDVCS measurements

Operations

- Experience running with µA beam currents

R. De Vita's slide from the High Lumi workshop

Outlook

- At the end of the next run, it is planned to have a dedicated High Luminosity test runs, to stress CLAS12 detectors and get better understanding of limitations (hardware and software wise)
  - Lead by Daniel Carman
  - Detailed plan is being developed

- Good chance for the μRWell (including VMM3) to be tested under the beam

Summary

- Installation of new μRWell tracking detectors in front of DC region 1 will reduce the tracking efficiency losses at high currents.
- Despite unexpected issues in prototype detectors, the project is moving along. We are close to take first data with the beam and dedicated Readout boards.
- Long-term: Configure CLAS12 to a muon detector at 100x luminosity through a two-stage upgrade

BACKUP

Other subsystems

- Beamline – no need for changes or upgrades
- FT – hodoscope preamplifier will need an upgrade,
  - New preamplifiers to make shorter signal width
- SVT/MVT – will perform,
  - Software being improved.
  - DAQ/trigger – need to replace some of the L1 hardware,
  - New JLab developed TDCs,
  - Change Readout of MVT from DRAM to SAMPA
  - Work is in progress
- PMT based detectors will perform well
- Replacement of the aging PMTs in EC has started

Note: RG-D and RG-E already took data with close to x2 Lumi already.

Nuclear target test report
CLAS12 Note 2021-001

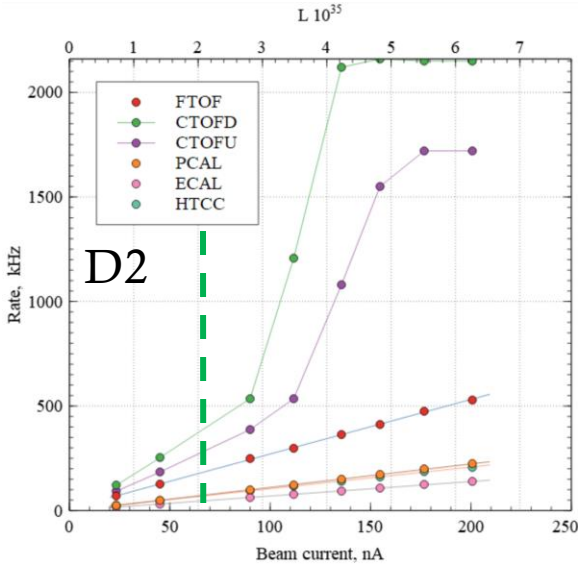

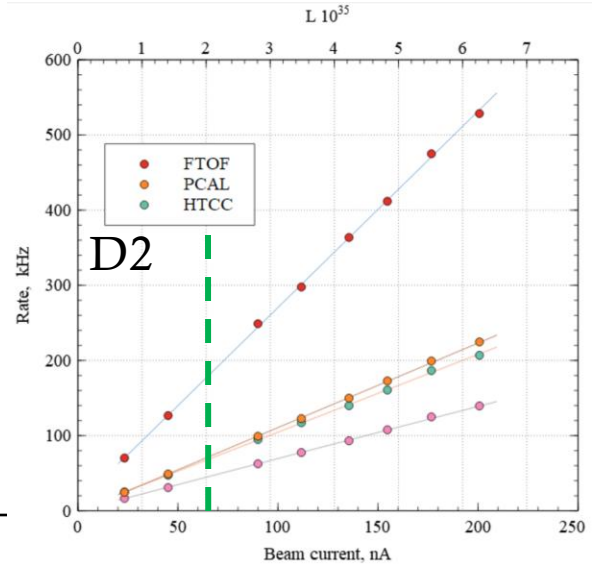

Tracking Efficiency for DC-only

Slide from Tongtong

- Rate of tracking efficiency lost for inbending runs:

Lost rate (per nA)		Pass2	New
RGA	eh^+	0.143%	0.0769%
	eh^-	0.140%	0.0740%
RGB	eh^+	0.225%	0.106%
	eh^-	0.199%	0.100%
RGD	eh^+	0.167%	0.0791%
	eh^-	0.159%	0.0867%

Tracking efficiency at a given beam current = 100% - lost rate * beam current

- Rate of tracking efficiency lost for outbending runs is smaller than inbending runs.
- With comprehensive updates for forward tracking, rate of tracking efficiency lost is improved to be better than 0.1% per nA for RGA and RGD in-bending, and close to 0.1% per nA for RGB in-bending, whose tracking efficiency is relatively worse since forward tagger is on.