CLAS12 Run Group H Workshop Transversely Polarized Target

Target Magnet and Cryostat Design

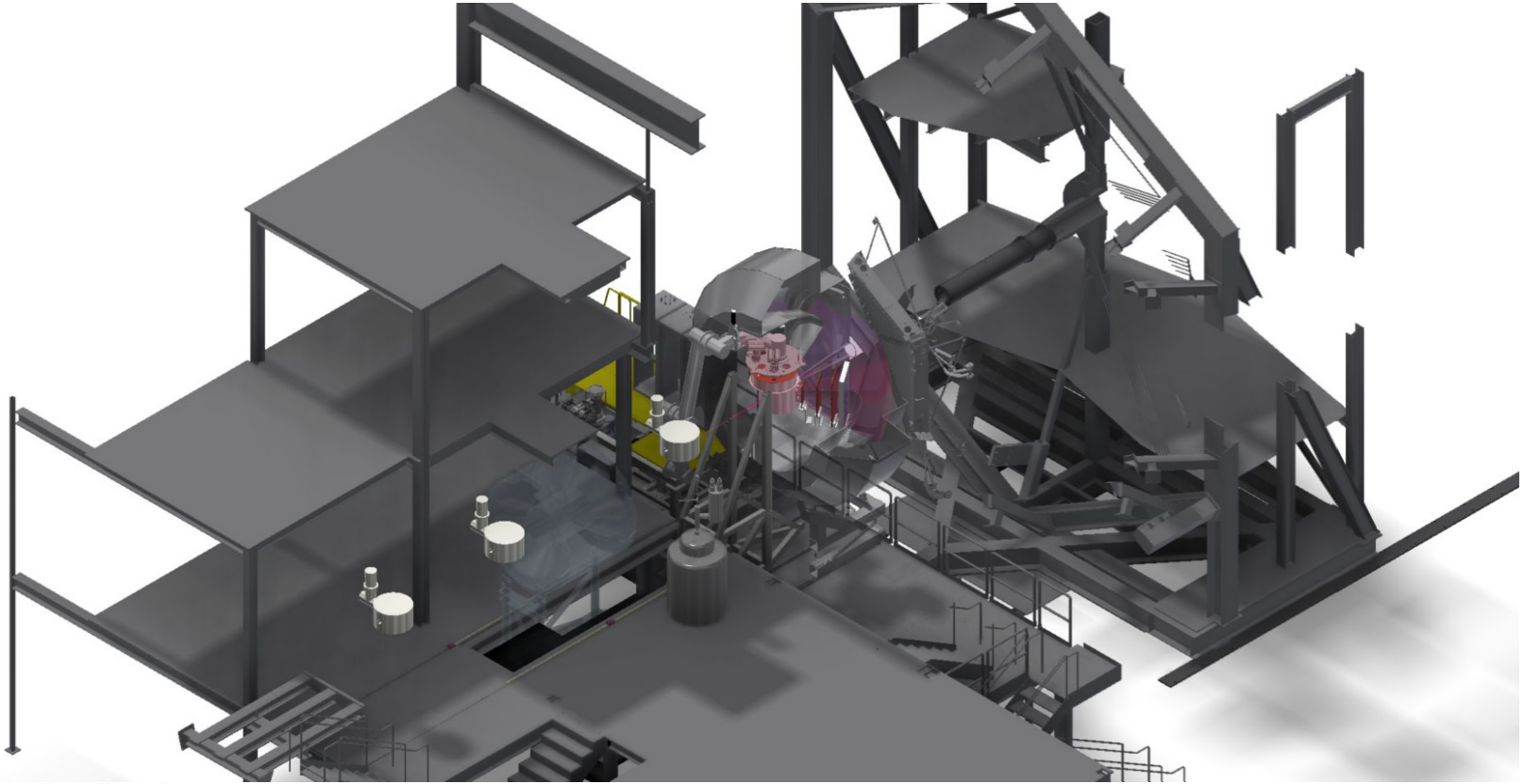

CLAS12 Run Group H Workshop Transversely Polarized Target

Target Magnet and Cryostat Design

Overview

- Target Support and Alignment
- Pump Cart and Equipment
- DNP 1 K Refrigerator
- Magnet, Procurement Status, and Design Impact
- R&D and Fabrication Requirements
- Summary and what's next

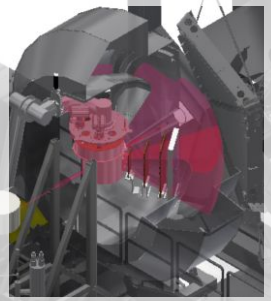

CLAS12 Run Group H Workshop Transversely Polarized Target

Target Magnet and Cryostat Design

- Target Support and Alignment

Support Frame for Magnet Mount

- Modular for testing in the EEL
- Recoil Detectors should be mounted to the Target Frame
  - Reduces the number of structures inside the HTCC
- Incorporated work platform for personal removing Beam Line segment, stinging He transform line, or accessing refrigerator/magnet components. (Not shown in preliminary CAD Model)

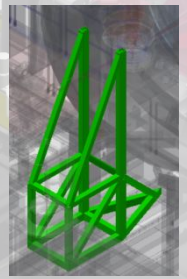

Tie Rod Positioning for Target

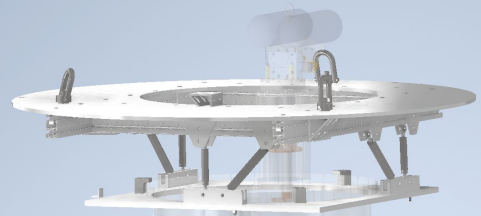

Cryomagnetics 5T Vertical Warm Bore Currently in the Target Development Lab w/ 6 adjustable linkages

CLAS12 Run Group H Workshop Transversely Polarized Target

Target Magnet and Cryostat Design

- Target Support and Alignment

Support Frame for Magnet Mount

- Modular for testing in the EEL
- Recoil Detectors should be mounted to the Target Frame
  - Reduces the number of structures inside the HTCC

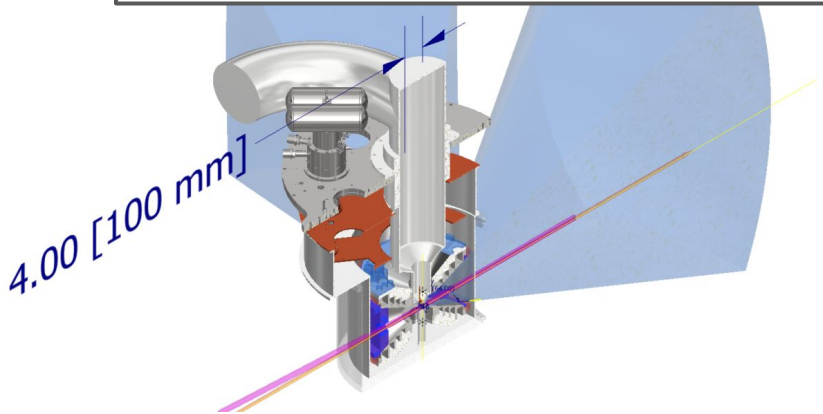

The centerline of the 1 K Refrigerator has a 100 mm offset downstream relative to the Top Plate centerline

New Location of the Target inside the HTCC

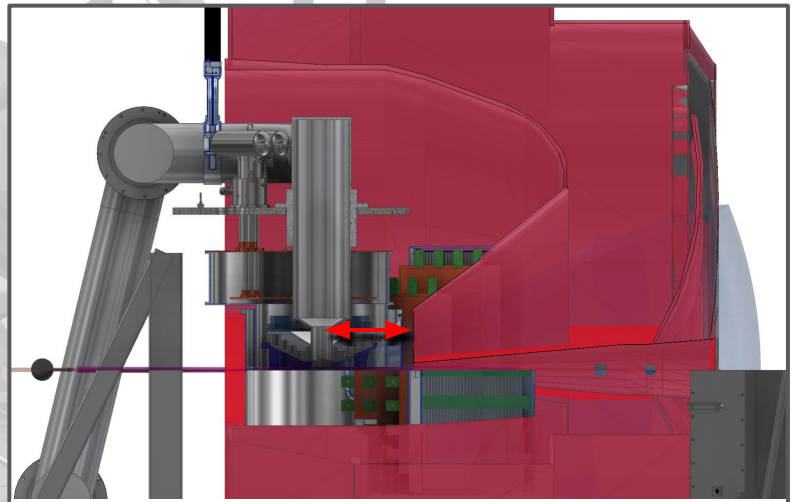

In the current model, the Target Center to HTCC distance is ~ 42 cm [16.5 in]. (37 cm [14.7 in] is possible)

CLAS12 Run Group H Workshop Transversely Polarized Target

Target Magnet and Cryostat Design

- Pump Cart and Equipment
  - Reusing the RGC Pump Cart w/o modification
  - Requires the addition of a Work Platform

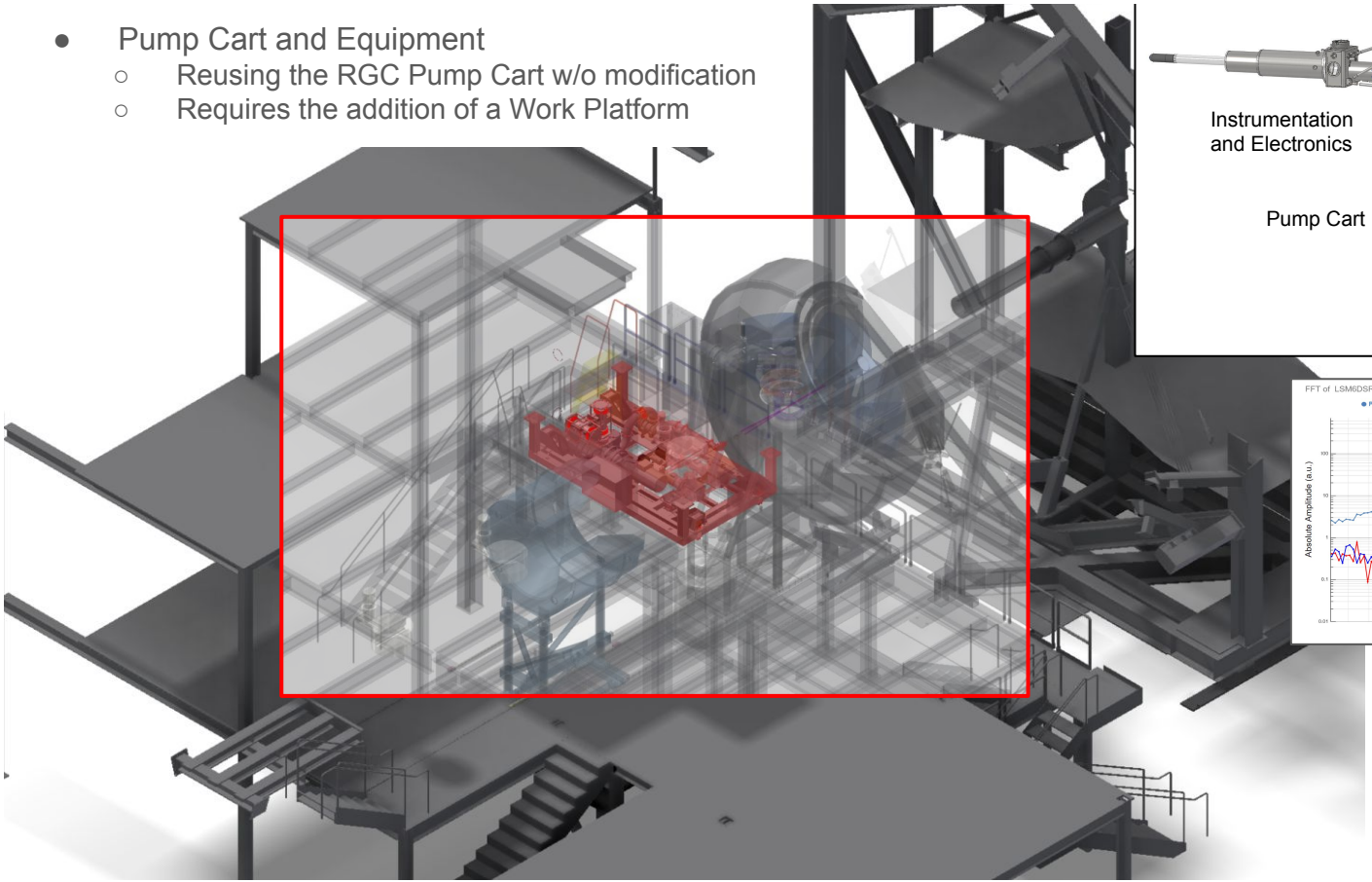

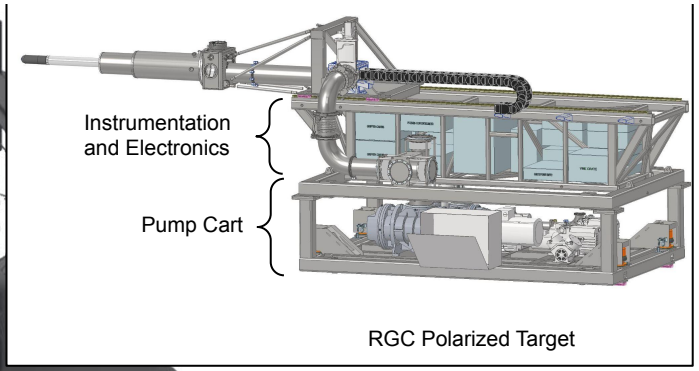

RGC Polarized Target

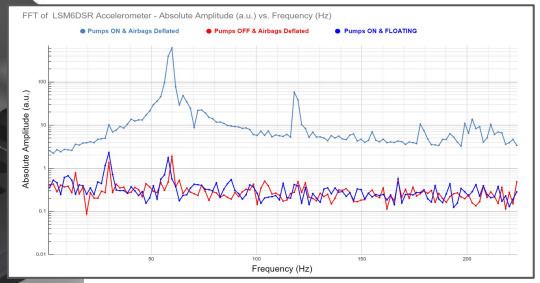

Vibration Isolation measurement from the RGC experiment.
Attenuation ≅ -49dB in amplitude
Approx 300:1

CLAS12 Run Group H Workshop Transversely Polarized Target

Target Magnet and Cryostat Design

- Pump Cart and Equipment
  - Reusing the RGC Pump Cart w/o modification
  - Requires the addition of a Work Platform

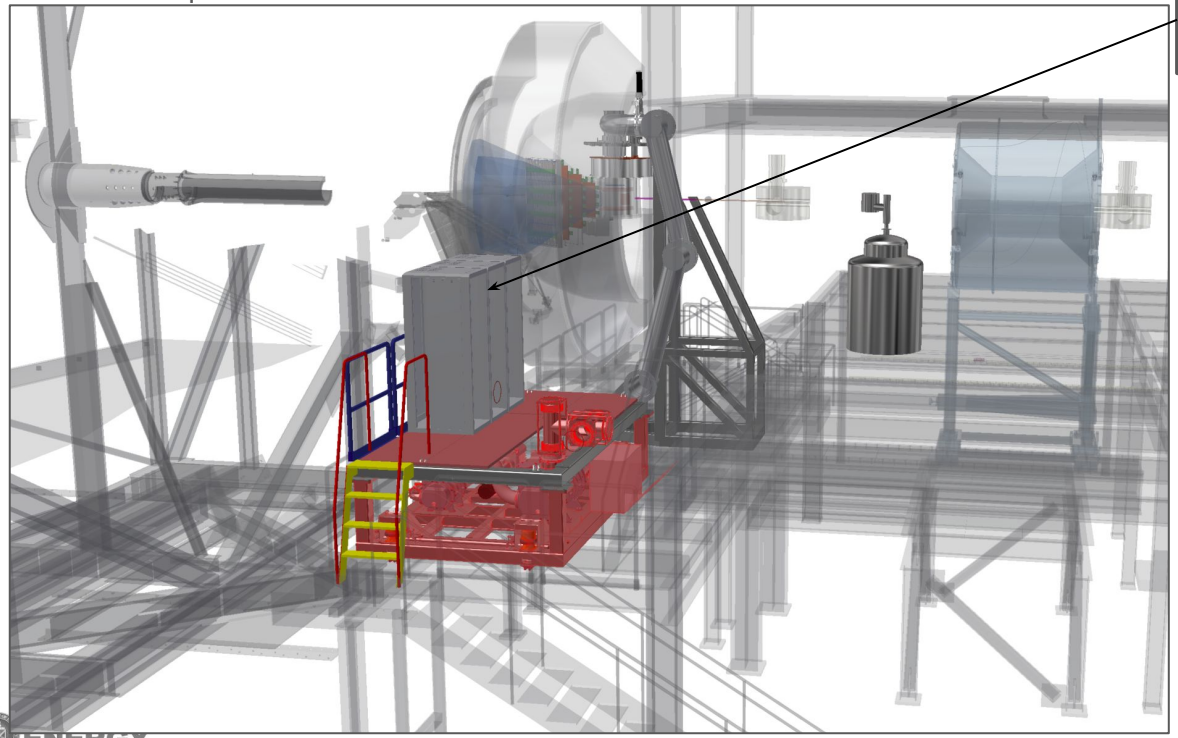

The addition of a work platform with handrails and ladder egress will accommodate 19” racks to house all instrumentation and electronics necessary for the RGH Target.

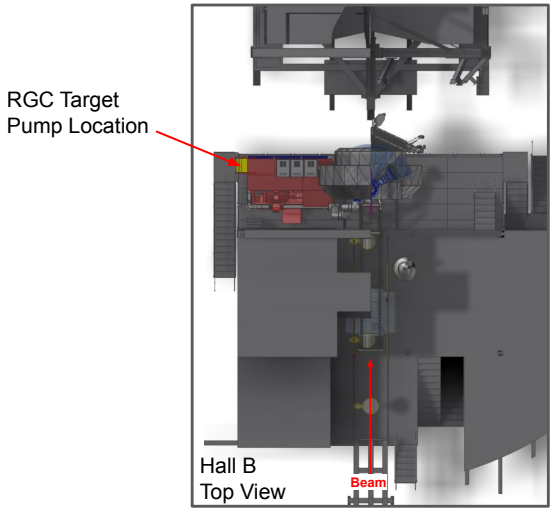

CLAS12 Run Group H Workshop Transversely Polarized Target

Target Magnet and Cryostat Design

- DNP 1 K Refrigerator similar to Hall-A G2p-Gep, Hall-C E12-15-005, Hall-B RGC, The Target Group TDL,...

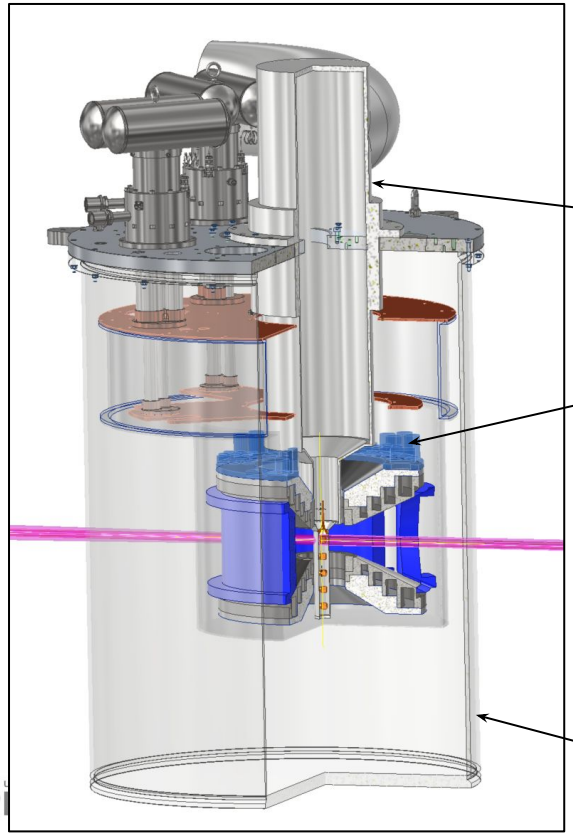

The Technical Specification Document is needed for the Manget Request for Proposal. There remains a few outstanding details. Mainly the loading forces due to the magnetic fields.

Refrigerator & Plumbing Volume

Accommodations for a second pulse tube is optional.

Locate the Quench Protection Circuit on the Top of the magnet.

Preliminary: Conventional scattering chamber design for aluminum foil windows illustrate the feasibility with the current geometry. Not shown is the Upper Vacuum Chamber. Both will be fabricated and quoted separately.

Testing OVC included in Request for Proposal.

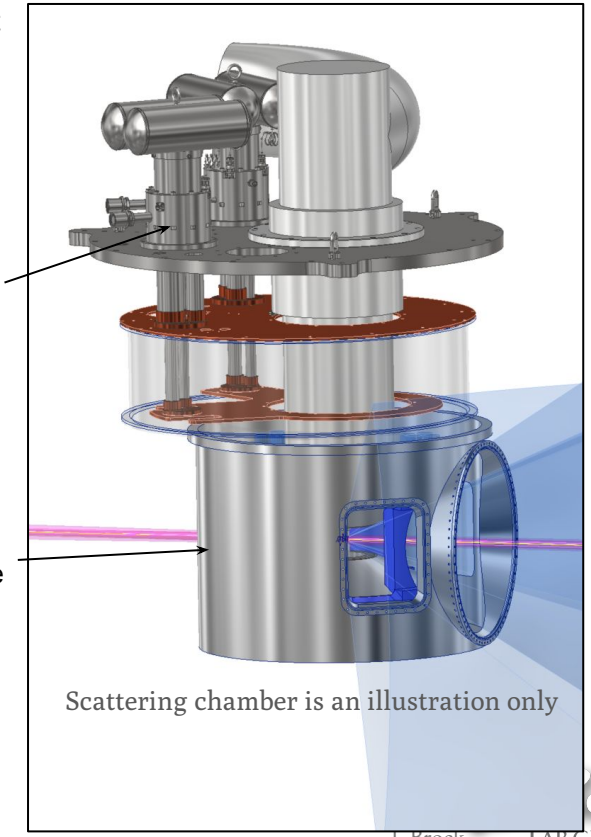

Scattering chamber is an illustration only

CLAS12 Run Group H Workshop Transversely Polarized Target

Target Magnet and Cryostat Design

- DNP 1 K Refrigerator similar to Hall-A G2p-Gep, Hall-C E12-15-005, Hall-B RGC, The Target Group TDL,...

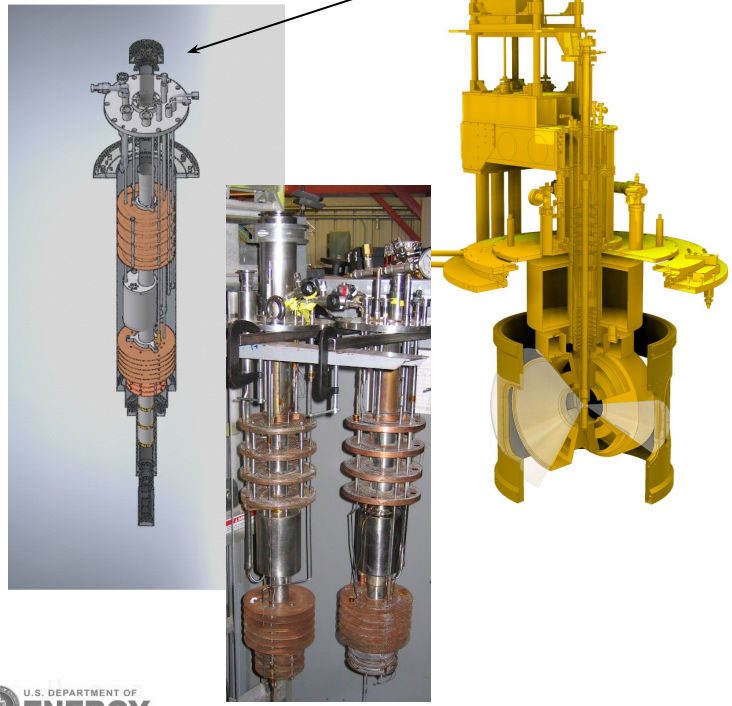

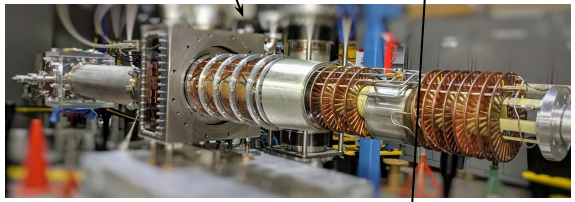

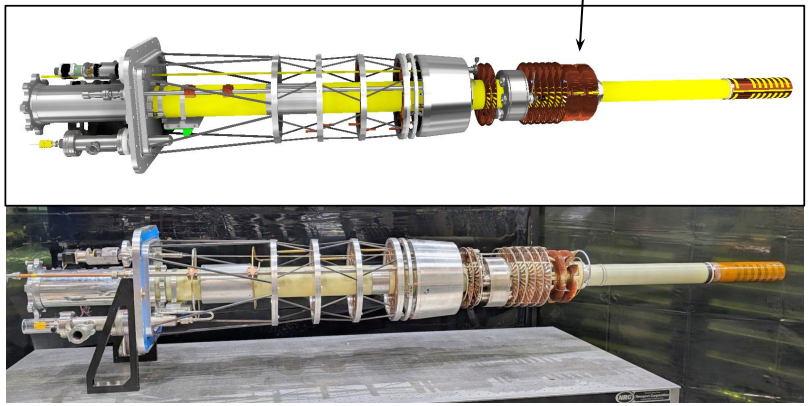

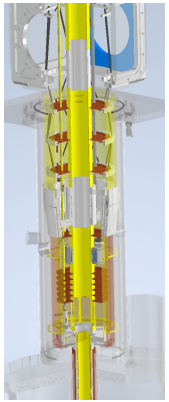

CLAS12 Run Group H Workshop Transversely Polarized Target

Target Magnet and Cryostat Design

- DNP 1 K Refrigerator similar to Hall-A G2p-Gep, Hall-C E12-15-005, Hall-B RGC, The Target Group TDL,...

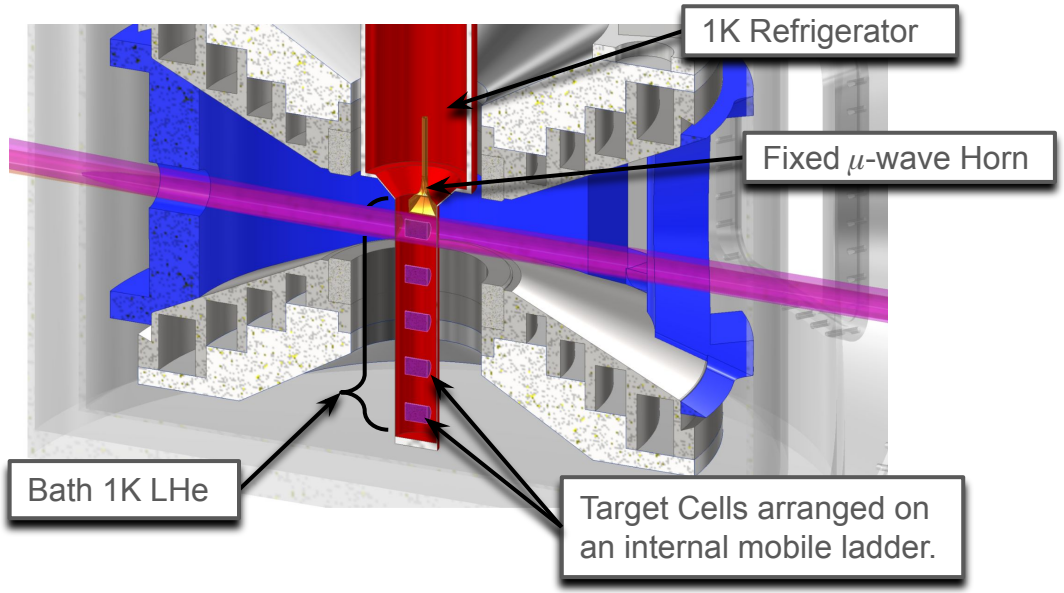

The 1K Bath section of the refrigerator is an aluminum cylinder machined to ~ 200 μm thick. There is minimal clearance between the Target Cells and the aluminum scattering window to minimizing the LHe encountered by the beam and scattered particles.

With room for multiple targets, the interval between annealing and target material replacement can be extended.

Optical and solid targets should occupy positions at the top of the ladder keeping ammonia target material submerged



RGC Material Storage Ladder

CLAS12 Run Group H Workshop Transversely Polarized Target

Target Magnet and Cryostat Design

- DNP 1 K Refrigerator Insert
  - Retraction of Target/Magnet System for Loading and removal

Internal annealing of the target material is an option however at some point the material will need to be replaced.

Utilizing the Hall B Solenoid Rails, the Target Support Frame will be retractable without disconnecting pumping lines or cryogen lines.

Approximately 0.6 m is required for removal of the Target Insert.

Fixed Stops on the Solenoid Rails will ensure alignment of the Target System is reproducible.

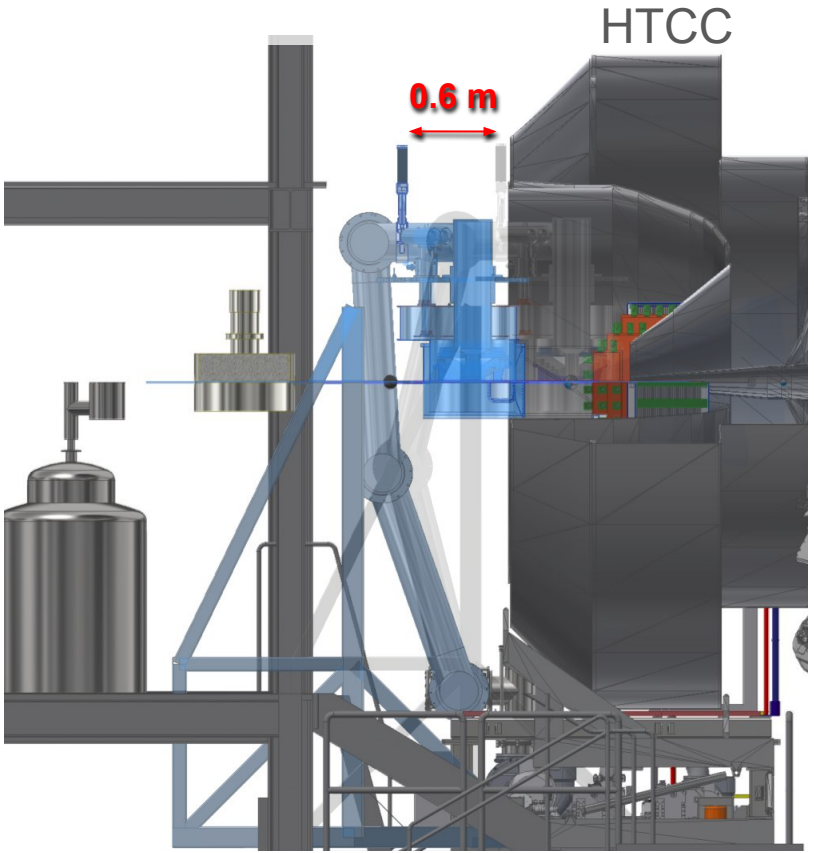

With the TDL and the Irradiation Cryostat, it may be the case that material replacement is faster and/or more reliable than an anneal.

CLAS12 Run Group H Workshop Transversely Polarized Target

Target Magnet and Cryostat Design

- DNP 1 K Refrigerator Insert
  - Retraction of Target/Magnet System for Loading and removal

Internal annealing of the target material is an option however at some point the material will need to be replaced.

Util
Fra
pur

Greater range of motion may be necessary for recoil detector accessibility…

Approximately 0.6 m is required for removal of the Target Insert.

Fixed Stops on the Solenoid Rails will ensure alignment of the Target System is reproducible.

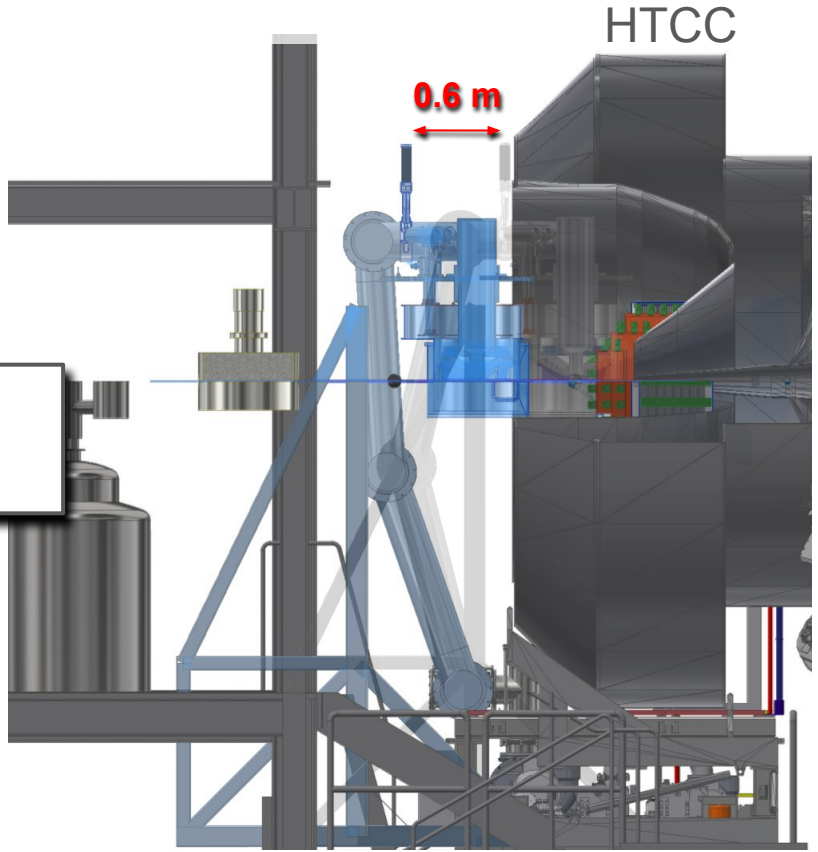

With the TDL and the Irradiation Cryostat, it may be the case that material replacement is faster and/or more reliable than an anneal.

CLAS12 Run Group H Workshop Transversely Polarized Target

Target Magnet and Cryostat Design

- Magnet, Procurement Status, and Design Impact

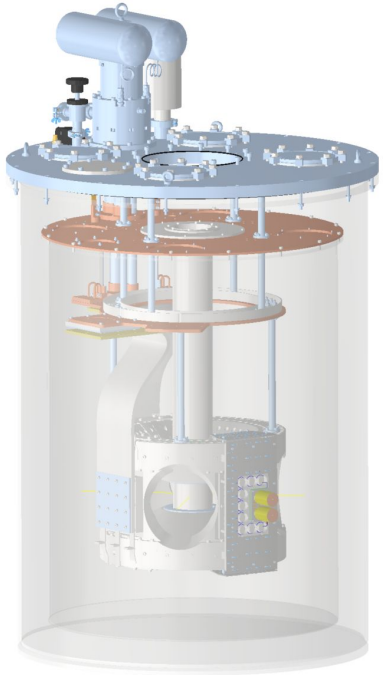

The Specifications Document is drafted and is currently being reviewed.

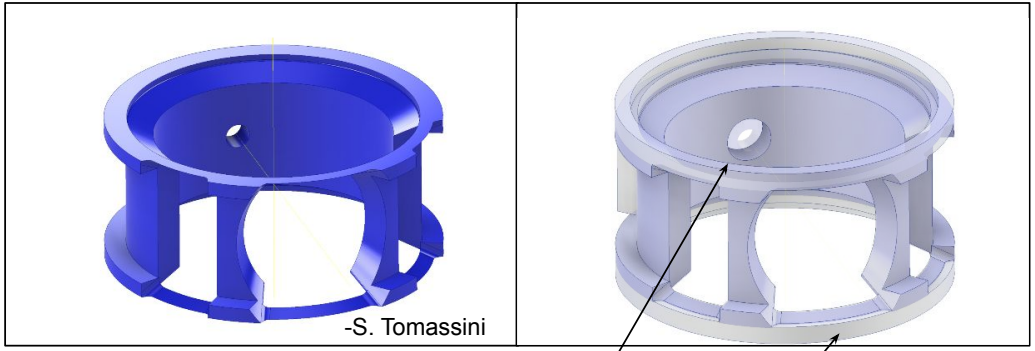

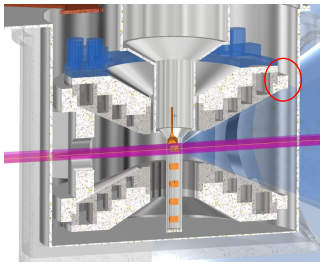

Enlarge the Beam entrance aperture

Add material around the circumference of the intercoil support for strength.

CLAS12 Run Group H Workshop Transversely Polarized Target

Target Magnet and Cryostat Design

- Magnet, Procurement Status, and Design Impact

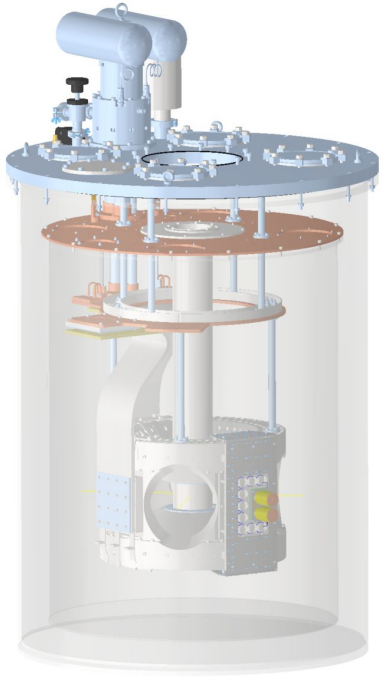

The Specifications Document is drafted and is currently being reviewed.

Dipole interaction with the nearest Chicane magnet and induced magnetism in local structures may impact the current design. Small differences in field estimates and the $1/d^4$ magnetic field interactions have significant impact on the structural loading that propagates through the design. Starting with internal supports structure of the magnet, then the Top Plate, and then the Target Support Frame.

CLAS12 Run Group H Workshop Transversely Polarized Target

Target Magnet and Cryostat Design

- Magnet, Procurement Status, and Design Impact

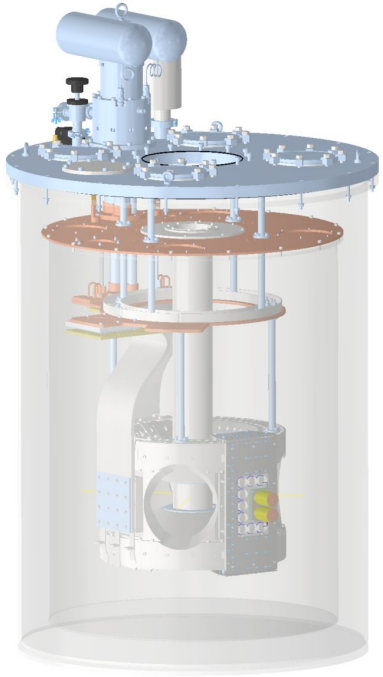

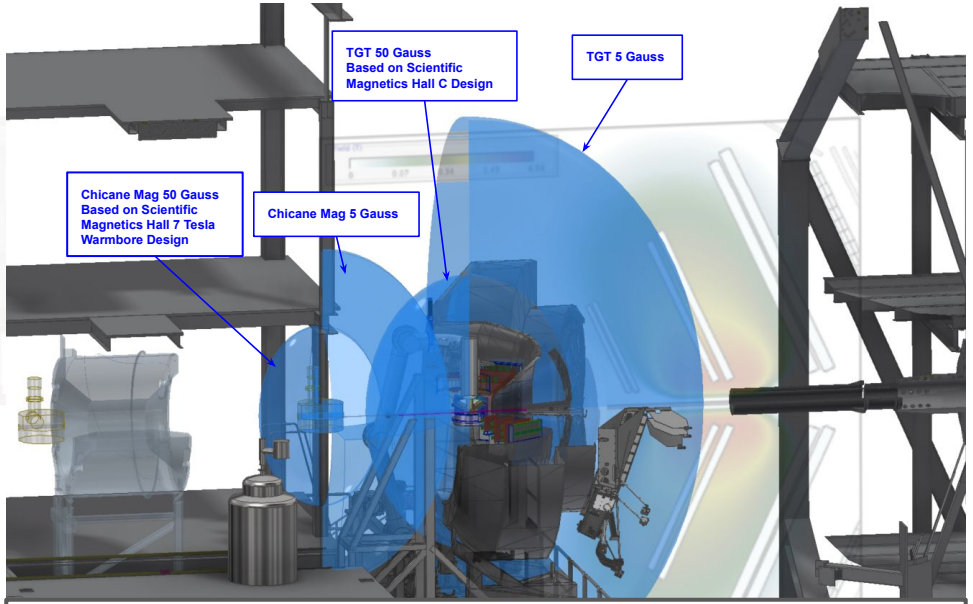

Simplistic Magnet Model Force Estimates:
Magnet w/ approx geometry over an infinite ferromagnetic plate 12 mm thk

- for a 5T Helmholtz coil approximation ~386 N (86.8 lbf)
- for a 5T solenoid approximation ~96.35 N (21.66 lbf)

Dipole-Dipole Force Estimates (assume 5T solenoid w/ similar current volumes, dipole moment ≈ 1.23×10^5 A.m^2)

- @ d = 2.3 m, F ~ 162 N (36.4 lbf)
- @ d = 2.4 m, F ~ 137 N (30.7 lbf)
- @ d = 2.5 m, F ~ 116 N (26.1 lbf)

CLAS12 Run Group H Workshop Transversely Polarized Target

Target Magnet and Cryostat Design

- Magnet, Procurement Status, and Design Impact

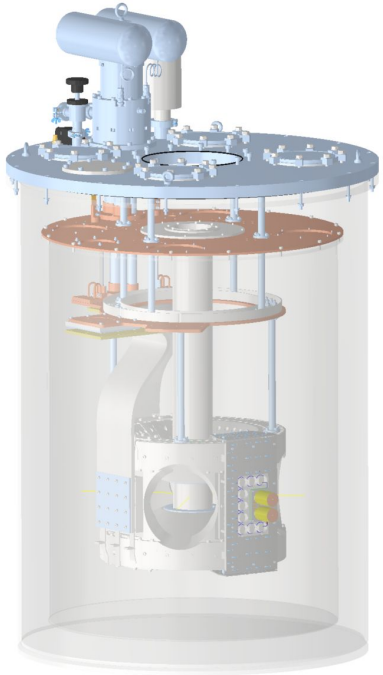

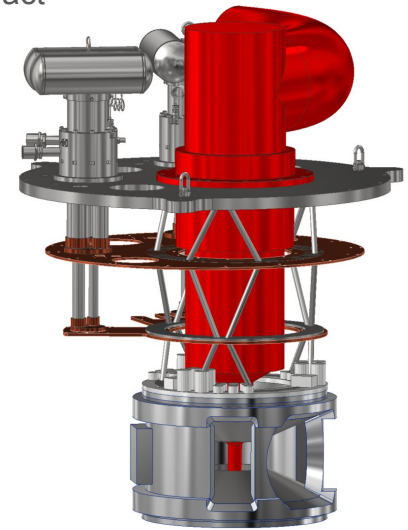

Alteration to the internal support structure will be required if lateral forces are possible.

Changes will propagate through the system, requiring alterations to the Procurement Specifications Document.

CLAS12 Run Group H Workshop Transversely Polarized Target

Target Magnet and Cryostat Design

- Magnet, Procurement Status, and Design Impact

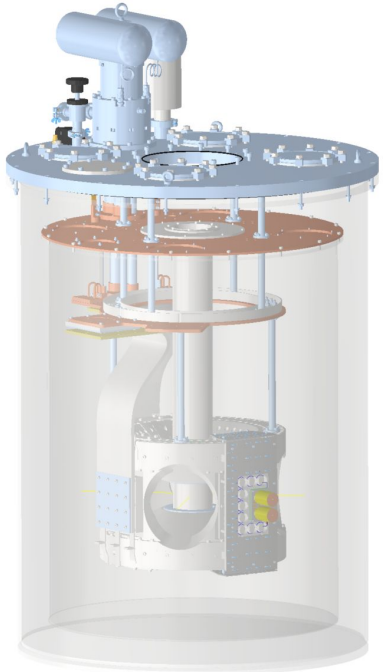

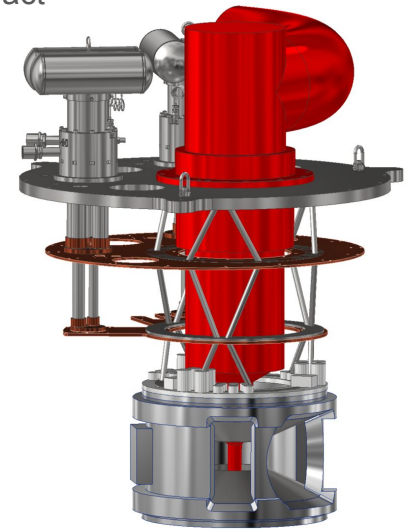

Loads for FEA

Mass of Magnet	≅ 136 kg [300 Lbf, 1.33kN]
Induced Ferromagnetic Force	≅ 68 kg [150 Lbf, 667 N]
Dipole–dipole interaction Force	≅ 91 kg [200 Lbf, 889 N]

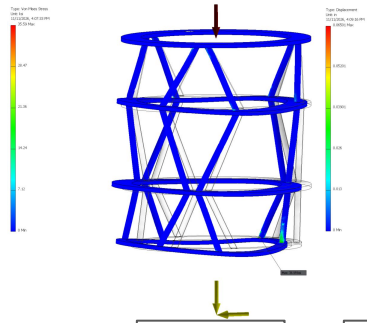

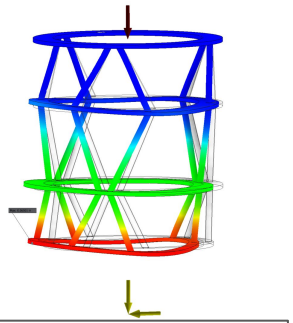

$$Q_{293to70K} = 0.416\ W \times 6 = 2.5\ W\ (Hexapod)$$

$$Q_{293to70K} = 0.421\ W \times 4 = 1.7\ W\ (Quad\ Columns)$$

Minor increase in heat load on the 1st Stage of the Pulse Tubes

CLAS12 Run Group H Workshop Transversely Polarized Target

Target Magnet and Cryostat Design

- Magnet, Procurement Status, and Design Impact

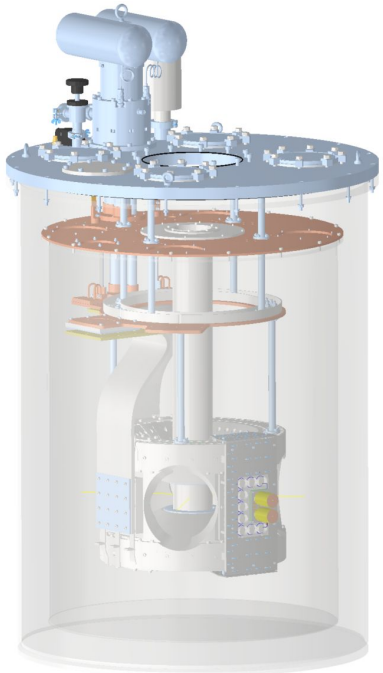

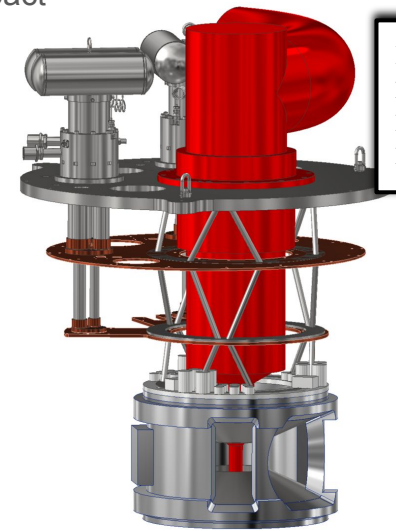

Loads for FEA

Loads for FEA	
Mass of Magnet	≅ 136 kg [300 Lbf, 1.33kN]
Induced Ferromagnetic Force	≅ 257 kg [566 Lbf, 2.52 kN]
Dipole–dipole interaction Force	≅ 131 kg [289 Lbf, 1.28 kN]

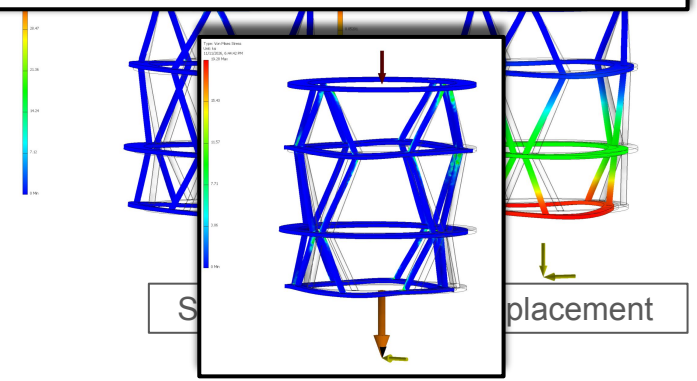

$Q_{293to70K}$ = 0.416 W × 6 = 2.5 W (Hexapod)

$$Q_{293to70K} = 0.416\ \text{W} \times 8 = 3.33\ \text{W (Octopod)}$$

$$Q_{293to70K} = 0.421\ \text{W} \times 4 = 1.7\ \text{W (Quad Columns)}$$

Minor increase in heat load on the 1st Stage of the Pulse Tubes

CLAS12 Run Group H Workshop Transversely Polarized Target

Target Magnet and Cryostat Design

- Magnet, Procurement Status, and Design Impact

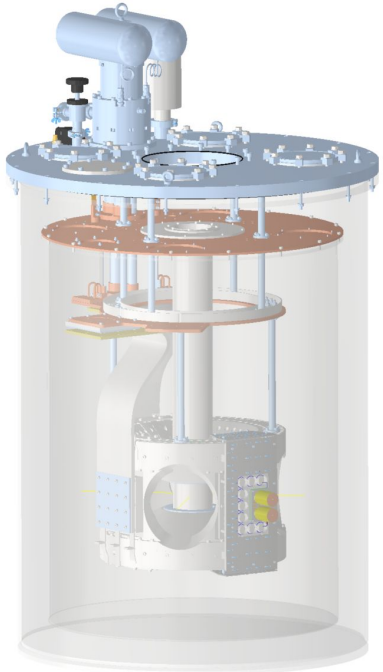

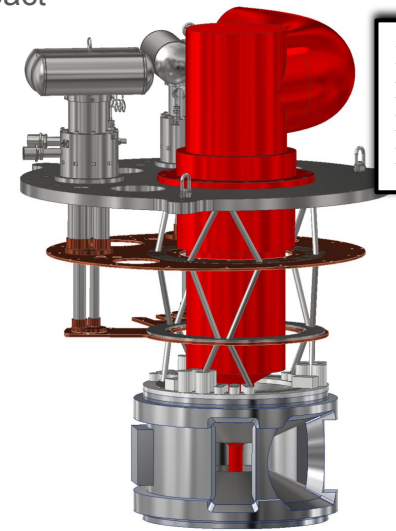

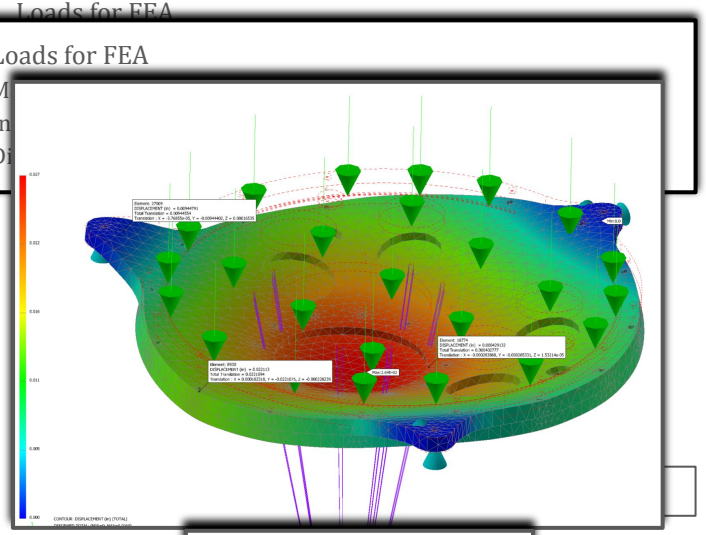

$Q_{293to70K} = 0.416\ W \times 6 = 2.5\ W$ (Hexapod)

$$Q_{293to70K} = 0.416\ W \times 8 = 3.33\ W\ (Octopod)$$

$$Q_{293to70K} = 0.421\ W \times 4 = 1.7\ W\ (Quad\ Columns)$$

Minor increase in heat load on the 1st Stage of the Pulse Tubes

CLAS12 Run Group H Workshop Transversely Polarized Target

Target Magnet and Cryostat Design

- Summary and what's next
  - After discussions with Bob Miller, an overall framework of the Target System is in place, and the division of labor is being structured. The details of the design continues.
    - RGC Pump Cart working platform - engineering and fabrication
    - Target Support Frame - awaiting magnetic field study
    - Pumping Tube - design, engineering, and fabrication
  - DNP 1 K Refrigerator
    - Design details needed for fabrication
    - Design for the Target Insert, ladder motion, & cells - R&D in the TDL
    - Design for the NMR Coil - R&D in the TDL
    - Refine μ-wave Horn/Reflector - R&D in the TDL
  - Polarizing Magnet
    - Spec Doc complete but may need design tweaks depending on magnet forces
    - Internal support structure and top plate design - awaiting magnetic field study
  - As challenges emerge in the design of these components, direction and feedback from the collaboration will be essential and I look forward to working together to provide the best possible target we can provide.

Thank you.

Reason #1 in support of an articulated Pumping Line:

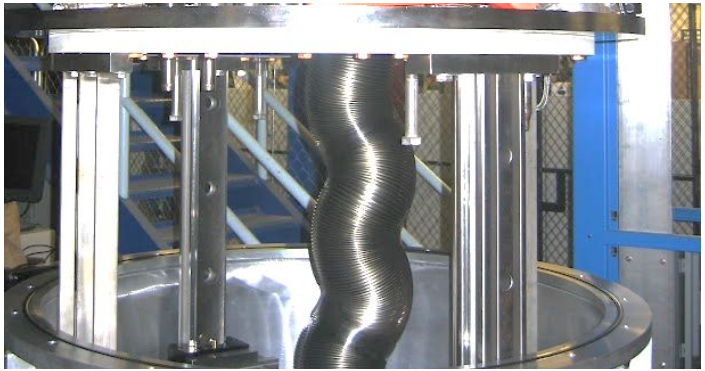

An example of internally pressurized edge welded bellows 100 mm ID x 170 mm OD.

RGH will need two 1 m sections of 300 mm ID x 400 mm OD edge welded bellows.

@ 1 psid the force is ~ 200 lbf

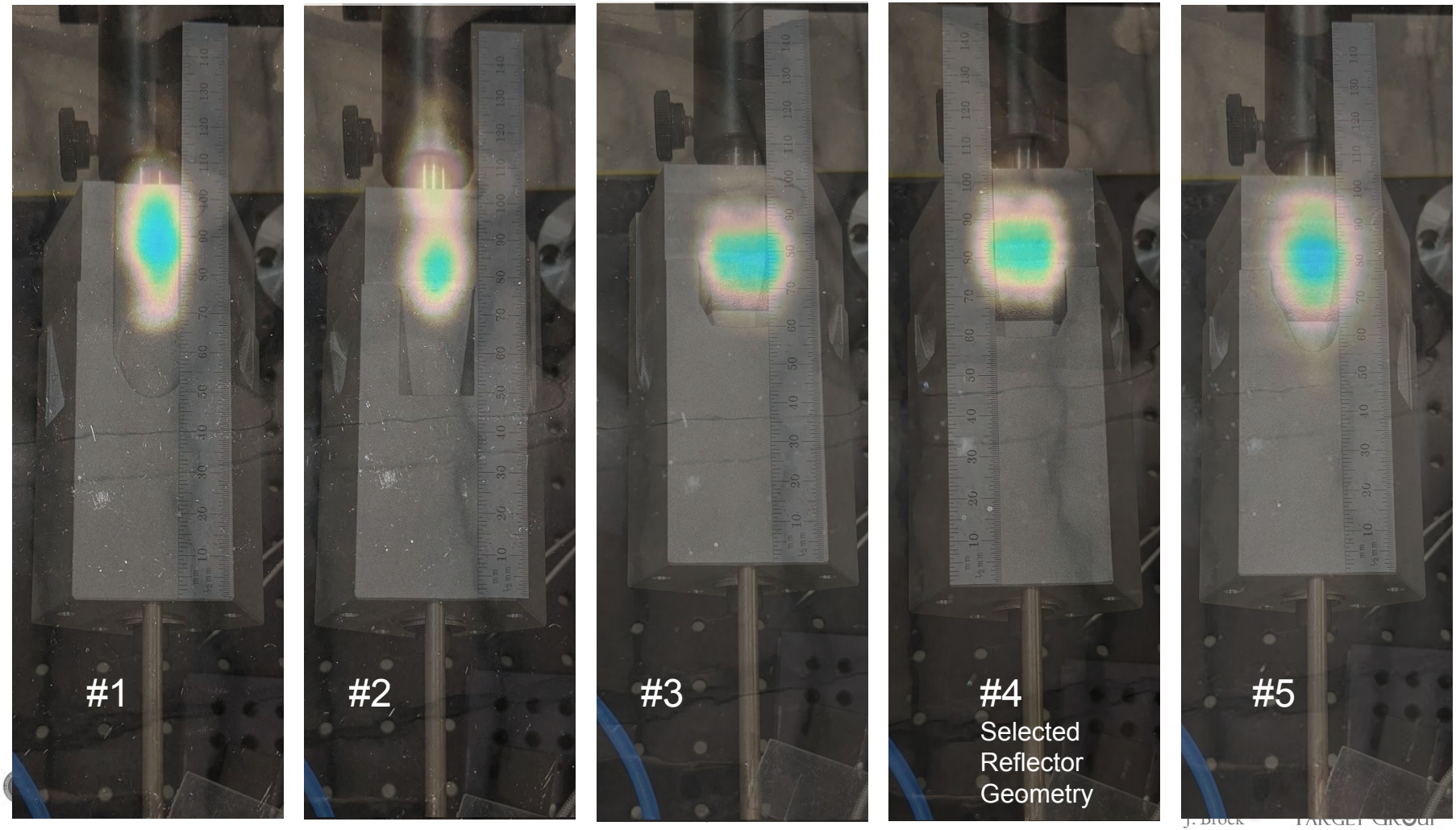
#1
#2
#3
#4
Selected
Reflector
Geometry
#5

	Ext Fx/kg	Ext Fy/kg	Ext Fz/kg	Ext F/kg		Int Fy/kg	Int Fxz/kg	Vert.Dev/deg
1						1,546	1	0.0
2						1,544	1	0.0
3						2,861	2	0.0
4						5,120	3	0.0
5						10,116	6	0.0
6					CM1	165,208	148	0.1
7						165,207	148	0.1
8						10,116	6	0.0
9						5,120	3	0.0
10						2,860	2	0.0
11	0.0	-0.1	-316.6	316.6		1,546	1	0.0
12						1,544	1	0.0
13						2,861	2	0.0
14						5,120	3	0.0
15						10,116	6	0.0
16					CM2	165,207	151	0.1
17						165,207	151	0.1
18						10,116	6	0.0
19						5,120	3	0.0
20						2,860	2	0.0
21	0.1	0.0	322.8	322.8		1,546	0	0.0
22						1,544	0	0.0
23						2,861	1	0.0
24						5,120	1	0.0
25						10,116	3	0.0
26					CM3	165,199	64	0.0
27						165,198	64	0.0
28						10,116	3	0.0
29						5,119	1	0.0
30	0.0	2.3	-137.0	137.0		2,860	1	0.0
31						65,742	37	0.0
32						2,327	18	0.5
33						11,135	8	0.0
34						6,530	3	0.0
35	-0.3	257.9	131.4	131.4		65,391	37	0.0
36						2,365	18	0.4
37					TM	11,083	8	0.0
38						6,527	3	0.0
39						0	0	44.4
40						0	0	37.1

Lorentz Forces to RGH Beam Line Magnets. From OPERA

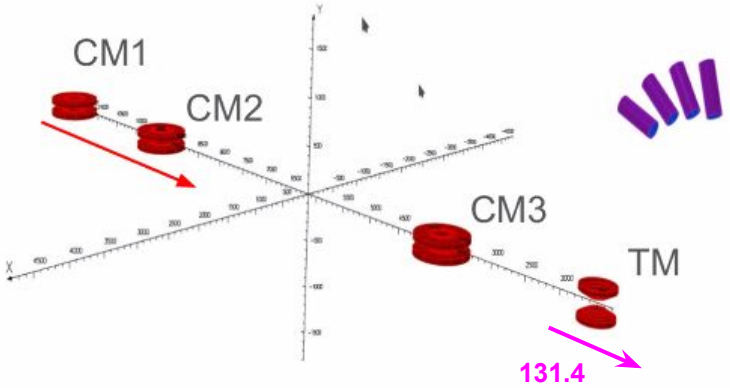

- Maximal Internal force is of 170 metric tonn.
- -horizontal forces are of 150 kg.
- Resultant external forces are of 329 kg

zoomgov.com is sharing your screen. Stop sharing Hide

Participants 14 Chat Share Screen Record Show Captions Reactions Apps Whiteboards